TIMKEN

TIMKEN® METALS PRODUCT CATALOG

TIMKEN® METALS PRODUCT CATALOG INDEX

TIMKEN OVERVIEW....2
- PRODUCTS AND SERVICES....5
- HOW TO USE THIS CATALOG....8
- SHELF LIFE POLICY....8
- STORAGE....9
- WARNINGS....10

POPULAR BEARING TYPES IN THE METALS INDUSTRY....11

ENGINEERING....17
- Explanations of Timken Bearing Symbols....18
- Bearing Tolerances....18
- Bearing Fitting Guidelines....34
- Bearing Radial Internal Clearances....45

BEARING DATA....49
- Spherical Roller Bearings....51
- Heavy-Duty Needle Roller Bearings....59
- ADAPT™ Bearings....63
- Four-Row Cylindrical Roller Bearings....67
- Tapered Roller Bearings....87
- Four-Row Tapered Roller Bearings....91
  - TQOW-2TDIW....91
  - Sealed Roll Neck Bearings....129
  - TQITS....145
- Two-Row Tapered Roller Bearings....155
  - TNASWH....155
  - TDIT-TNAT....159
- Thrust Tapered Roller Bearings....173
  - TDIK....173
  - TTDWK-TTDFLK....187
  - Solutions for Screwdown Systems....195
- Thrust Spherical Roller Bearings....207

GROW STRONGER WITH TIMKEN

Every day, people around the world count on the strength of Timken. Our expertise in metallurgy, friction management and mechanical power transmission helps them accelerate improvements in productivity and uptime.

We supply products and services that can help keep your operations moving forward, whether you need drive train kits for commercial vehicles, durable housings for bearings in dirty environments, couplings that avoid metal-to-metal contact between motors and gearboxes, repair services for bearings and gearboxes, roller chain for dry, abrasive and high-moisture applications or other products or services for your applications.

When you choose Timken, you receive more than high-quality products and services: you gain a worldwide team of highly trained and experienced Timken people committed to working collaboratively with you to improve your business.

Globally, our 17,000 people provide reliable answers for a wide range of operations in manufacturing, mining, medical equipment, aerospace, transportation, oil and gas – and other diverse industries.

INCREASE YOUR EQUIPMENT UPTIME

In addition to high-quality bearings and mechanical power transmission components, we provide valuable integrated products and services. For example, we offer repair services and monitoring equipment that can alert you to problems before they impact your uptime.

Additionally, we offer a broad selection of seals, premium lubricants, lubricators, couplings and chain to keep your operations moving smoothly.

Our 12 technology centers in the United States, Europe and Asia help pioneer tomorrow's innovations with extensive basic and applied scientific research programs. Through internal development and strategic acquisition of innovative companies, we continue to expand our portfolio of highly engineered bearings, power transmission products and advanced services.

METALS INNOVATOR

Today, metal processing equipment handles heavier loads, faster speeds and greater expectations than ever before. As finished product quality requirements increase, producers continue to place a very high premium on equipment uptime and performance.

As the leader in friction-management and power-transmission solutions for the metals industry, Timken helps metals operators improve their equipment's performance and uptime. We accomplish this by providing custom solutions – from bearings that stand-up to the harshest environments to condition monitoring that minimizes maintenance costs and improves plant productivity.

We have more than a century of experience developing bearings and related solutions that help equipment run more efficiently in a wide range of applications, including continuous casting and rolling both flat and long products.

INNOVATION AND CUSTOMER SUPPORT

Timken operates technology centers around the world dedicated to developing innovative concepts and products that help you operate more efficiently. Our technical leadership and customer support reach far beyond our products. Timken customers have access to sales and service engineering support at their plants and options for additional support from application engineers who specialize in the metals industry.

CORE CAPABILITIES

Timken has evolved from its early roots as a bearing producer to a supplier offering much more, including friction-management and power-transmission solutions that add value throughout the complete life cycle of a system. Our material enhancements improve bearing life and can protect against debris and corrosion – two common challenges in processing metals. Our precision manufacturing capabilities and commitment to quality ensure global consistency in design and manufacturing at every Timken facility. A global distribution network provides our customers with easy access to Timken products and services throughout the world.

We leverage these core capabilities as we work with original equipment manufacturers (OEM) and designers to integrate our technologies into equipment so that end users can enjoy the performance benefits of Timken products from the first day of operation. OEMs depend on Timken for our engineering expertise, manufacturing capabilities and emphasis on reliable performance.

PRODUCTS AND SERVICES

We offer equipment builders and operators one of the most extensive friction-management product and service portfolios in the industry.

We also strictly adhere to the Timken Quality Management System in every plant worldwide, so each bearing product meets the same high quality standards – no matter where in the world it is manufactured.

BEARINGS

Timken provides a broad range of bearing designs and configurations for use in steelmaking vessels, caster segments, work rolls, backup rolls, screwdown systems, mill drives, pinion stands, coilers, table rolls, and auxiliary equipment. Bearing types include:

- **Tapered roller bearings** – Tapered roller bearings are uniquely designed to manage both thrust and radial loads and are available in single- and multi-row designs with a wide range of assembly options. Our extensive offering of tapered roller bearing combinations provides equipment builders and operators simple, reliable and less costly design solutions.
- **Cylindrical roller bearings** – This design generally offers the highest possible radial load capacity for a given size compared to other roller bearing types. Our expanded line of cylindrical roller bearings – including single, double and multi-row versions – can help extend equipment life and reduce maintenance costs. Single-row and double-row cylindrical roller bearings are ideal for gear drive and other auxiliary equipment applications. The advanced design of the Timken® Four-row cylindrical roller bearings offers ease of installation and high performance in demanding roll neck applications. Custom designs are available upon request for specific applications.
- **Spherical roller bearings** – Spherical roller bearings offer high radial and moderate thrust capacity together with maximum static and dynamic misalignment capability. Timken spherical roller bearings are designed to extend bearing life and boost reliability, resulting in bearings that run cooler, faster, and longer than the competition. These bearings are available in a range of dimensional stability configurations to suit elevated operating temperatures.
- **ADAPT™ bearings** – A combination of cylindrical and spherical roller bearing designs, Timken® ADAPT™ bearings maximize load capacity for mill operators. The easy-to-assemble, high-capacity configuration is ideal for applications with combined misalignment and axial displacement.
- **Thrust roller bearings** – Thrust roller bearings for rolling mill applications are available in cylindrical, spherical and tapered designs. Thrust bearings are ideal for applications experiencing heavy axial loads, such as mill stands, screwdown systems and piercing mills.
- **Ball bearings** – Ball bearings are used extensively in auxiliary applications that have light loads and/or high-speed conditions. Timken offers a range of radial, thrust and angular-contact ball bearings in both metric and inch sizes. Please contact your Timken engineer for detailed information on these product ranges.
- **Housed units** – Timken® spherical roller bearing solid-block housed units have a unique cast-steel design that handles demanding conditions in metal industry applications. These solid-block housed units come in several styles and five advanced locking configurations. Timken® spherical roller bearing solid-block housed units are designed for challenging circumstances. A full line of primary seals, covers and housings is available to find the right roller housed unit to fit your application.

  In case of high thrust loads, in excess of the spherical roller bearing carrying capabilities, the Timken® Type E is your recommended solution.

  Timken also provides a broad range of SNT metric plummer blocks and the SAF inch pillow block line which include a wide range of sizes, housing designs, seals and accessories. The standard line of Timken® split-block housings is constructed of cast iron and designed to protect bearings.

HIGH-PERFORMANCE BEARING SOLUTIONS

Timken provides the metals industry with a variety of high-performance bearing solutions, including Timken® AquaSpexx®, DuraSpexx® and thin dense chrome bearings for corrosion protection. Our debris-resistant bearings are ideal for contaminated and/or marginal lubrication conditions.

We also provide customized bearing solutions such as special race profiles to meet special application requirements.

In addition to component geometry and metallurgy, we find many ways to enhance bearing performance by applying unique surface finishes and special coatings on rollers, raceways and other functional surfaces. Engineered surfaces and topographical modification reduce surface roughness to lower levels than can be achieved through conventional grinding and honing methods. We also offer proprietary coatings that can create a surface up to four times harder than steel with twice the elasticity. For more information on Timken high-performance bearings and engineered surfaces, see the Application Challenges and Enhanced Bearing Solutions section of the Timken® Engineering Manual – Metals Industry edition (order no.10668).

POWER TRANSMISSION COMPONENTS AND SYSTEMS

Timken offers an expanding range of power transmission components including seals, couplings and engineered chain.

Extreme temperatures and high contamination levels can disable your equipment and significantly lower productivity. Timken develops seals using advanced material and process solutions that help protect machinery and minimize plant downtime. We offer a comprehensive line of large-bore oil and grease seals and metallic and non-metallic bearing isolators.

Timken® Quick-Flex® couplings are highly durable, yet need minimal maintenance. They are easy to install and require no lubrication. The couplings are designed to connect motors and gearboxes with other moving equipment with capacity to transmit the same or more torque than a gear coupling in the same dimensions. The Quick-Flex coupling's innovative design utilizes an advanced elastomeric element to transmit the torque and therefore eliminates any interference between coupling hubs which can damage equipment.

Quick-Flex coupling.

Timken manufactures precision roller chains that are designed to meet demanding steel industry applications. We build chains to precise specifications for strength and maximum wear life. The offering includes a complete line of roller chains, attachment chains and engineered conveyor chains.

LUBRICANTS AND LUBRICATION SYSTEMS

Serving industries around the world, Timken® lubricants and lubrication systems are essential in maximizing performance, productivity and uptime. Leveraging our expertise in tribology and anti-friction bearings, we've developed lubricants – including 27 formulations of grease – that help ensure smooth operation. Our single- and multi-point lubricators, in addition to Interlube automated lubrication delivery systems, dispense precise amounts of grease, saving time and money over manual application.

MAINTENANCE TOOLS

Timken® maintenance tools may extend bearing life by facilitating proper installation, removal and service. They also help simplify maintenance practices. We provide induction heaters, impact fitting tools and hydraulic and mechanical pullers.

SERVICES

Used bearings and related components often can be returned to their original specifications with less time and costs than purchasing new. We offer complete remanufacture and reconditioning services for many components, including bearings, chocks, housings, rolls and more.

Our gearbox repair services are globally recognized for power transmission solutions in heavy industrial markets, repairing virtually any large gearbox make or model, with onsite emergency breakdown service available if needed.

Timken® offers a full range of maintenance and reconditioning services through our remanufacturing and repair operations. Using these services can lead to improved plant efficiency and reduced overall production costs.

Beyond bearing repair and depending on the location, we offer chock maintenance and roll rebuilding to help mill operators get the most out of their chock/bearing assembly.

In addition, our MILLTEC® rolling mill program provides around-the-clock management of the roll shop with the goal of minimizing operational costs and downtime.

TRAINING

We offer industry-specific training programs designed for plant professionals, as well as onsite customized training to meet your specific needs. Our metals industry training programs are available at select locations around the world and cover every phase of bearing performance in the metal-making environment. Class time is balanced with extensive hands-on training and tours of Timken facilities.

HOW TO USE THIS CATALOG

We designed this catalog to help you find the Timken bearings best suited to your specifications in the metals industry. The product tables list many of the bearing types that are specifically used in metals applications. For other bearing types, please refer to the respective Timken product catalog reference.

Timken offers an extensive range of bearings and accessories in both imperial and metric sizes. For your convenience, size ranges are indicated in millimeters and inches. Contact your Timken engineer to learn more about our complete line for the special needs of your application.

This publication contains dimensions, tolerances and load ratings, as well as engineering sections describing fitting practices for shafts and housings, internal clearances, materials and other bearing features. It provides valuable assistance in the initial consideration of the type and characteristics of the bearings that may best suit your particular needs.

ISO and ANSI/ABMA, as used in this publication, refer to the International Organization for Standardization and the American National Standards Institute/American Bearing Manufacturers Association.

SHELF LIFE AND STORAGE

To help you get the most value from our products, Timken provides guidelines for the shelf life of grease-lubricated ball and roller bearings, components and assemblies. Shelf life information is based on Timken and industry test data and experience.

SHELF LIFE POLICY

Shelf life should be distinguished from lubricated bearing/component design life as follows:

Shelf life of the grease-lubricated bearing/component represents the period of time prior to use or installation.

The shelf life is a portion of the anticipated aggregate design life. It is impossible to accurately predict design life due to variations in lubricant bleed rates, oil migration, operating conditions, installation conditions, temperature, humidity and extended storage.

Shelf life values, available from Timken, represent a maximum limit and assume adherence to the storage and handling guidelines suggested in this catalog or by a Timken associate. Deviations from the Timken storage and handling guidelines may reduce shelf life. Any specification or operating practice that defines a shorter shelf life should be used.

Timken cannot anticipate the performance of the grease lubricant after the bearing or component is installed or placed in service.

TIMKEN IS NOT RESPONSIBLE FOR THE SHELF LIFE OF ANY BEARING/COMPONENT LUBRICATED BY ANOTHER PARTY.

EUROPEAN REACH COMPLIANCE

Timken-branded lubricants, greases and similar products sold in stand-alone containers or delivery systems are subject to the European REACH (Registration, Evaluation, Authorization and Restriction of CHemicals) directive. For import into the European Union, Timken can sell and provide only those lubricants and greases registered with ECHA (European Chemical Agency). For more information, please contact your Timken engineer.

STORAGE

Timken suggests the following storage guidelines for our finished products (bearings, components and assemblies, referred to as "products"):

- Unless directed otherwise by Timken, products should be kept in their original packaging until they are ready to be placed into service.
- Do not remove or alter any labels or stencil markings on the packaging.
- Products should be stored in such a way that the packaging is not pierced, crushed or otherwise damaged.
- After a product is removed from its packaging, it should be placed into service as soon as possible.
- When removing a product that is not individually packaged from a bulk pack container, the container should be resealed immediately after the product is removed.
- Do not use product that has exceeded its shelf life as defined in the Timken shelf life guidelines statement.
- The storage area temperature should be maintained between 0º C (32º F) and 40º C (104º F); temperature fluctuations should be minimized.
- The relative humidity should be maintained below 60 percent and the surfaces should be dry.
- The storage area should be kept free from airborne contaminants such as, but not limited to, dust, dirt, harmful vapors, etc.
- The storage area should be isolated from undue vibration.
- Extreme conditions of any kind should be avoided.

Due to the fact that Timken is not familiar with your particular storage conditions, we strongly suggest following these guidelines. However, you may be required by circumstances or applicable government requirements to adhere to stricter storage requirements.

Most bearing components typically ship protected with a corrosion-preventive compound that is not a lubricant. These components may be used in oil-lubricated applications without removal of the corrosion-preventive compound. When using some specialized grease lubrications, we advise you to remove the corrosion-preventive compound before packing the bearings components with suitable grease.

WARNING

Failure to observe the following warnings could create a risk of death or serious injury.

Proper maintenance and handling practices are critical. Always follow installation instructions and maintain proper lubrication.

Overheated bearings can ignite explosive atmospheres. Special care must be taken to properly select, install, maintain, and lubricate housed unit bearings that are used in or near atmospheres that may contain explosive levels of combustible gases or accumulations of dust such as from grain, coal, or other combustible materials.

If hammer and bar are used for installation or removal of a part, use a mild steel bar (e.g., 1010 or 1020 grade). Mild steel bars are less likely to cause release of high-speed fragments from the hammer, bar or the part being removed.

Warnings for this product line are in this catalog and posted on http://www.timken.com/warnings.

NOTE

Do not attempt to disassemble unitized bearings. Components may become damaged and affect the performance and service life of the bearing.

Do not mix components of matched assemblies. Mixing components can reduce the service life of the bearing.

DISCLAIMER

This catalog is provided solely to give you analysis tools and data to assist you in your product selection. Product performance is affected by many factors beyond the control of Timken. Therefore, the suitability and feasibility of all product selection must be validated by you.

Timken products are sold subject to Timken's terms and conditions of sale, which include its limited warranty and remedy, which terms may be found at http://www.timken.com/termsandconditionsofsale. Please consult with your Timken engineer for more information and assistance.

Every reasonable effort has been made to ensure the accuracy of the information in this writing, but no liability is accepted for errors, omissions or for any other reason.

COMPLIANCE

To view the complete engineering catalog, please visit www.timken.com. To order the catalog, please contact your Timken engineer and request a copy of the Timken Engineering Manual (order number 10424).

European REACH compliance *Timken-branded lubricants, greases and similar products sold in stand-alone containers or delivery systems are subject to the European REACH (**R**egistration, **E**valuation, **A**uthorization and Restriction of **CH**emicals) directive. For import into the European Union, Timken can sell and provide only those lubricants and greases that are registered with ECHA (**E**uropean **CH**emical **A**gency). For further information, please contact your Timken engineer.*

The Timken Company products shown in this catalog may be directly, or indirectly subject to a number of regulatory standards and directives originating from authorities in the USA, European Union, and around the world, including: REACH (EC 1907/2006, RoHS (2011/65/EU), ATEX (94/9/EC), 'CE' MARKING (93/68/EEC), CONFLICT MINERALS (Section 1502 of the Dodd-Frank Wall Street Reform and Consumer Protection Act).

For any questions or concerns regarding the compliancy or applicability of Timken products to these, or other unspecified standards, please contact your Timken sales engineer or customer services representative.

Updates are made periodically to this catalog. Visit www.timken.com for the most recent version of the Timken Thrust Bearing Catalog.

POPULAR BEARING TYPES IN THE METALS INDUSTRY

The product tables included in this catalog are for bearing types that are specifically used in metals applications. For other bearing types and sizes not listed, please refer to the respective Timken product catalog.

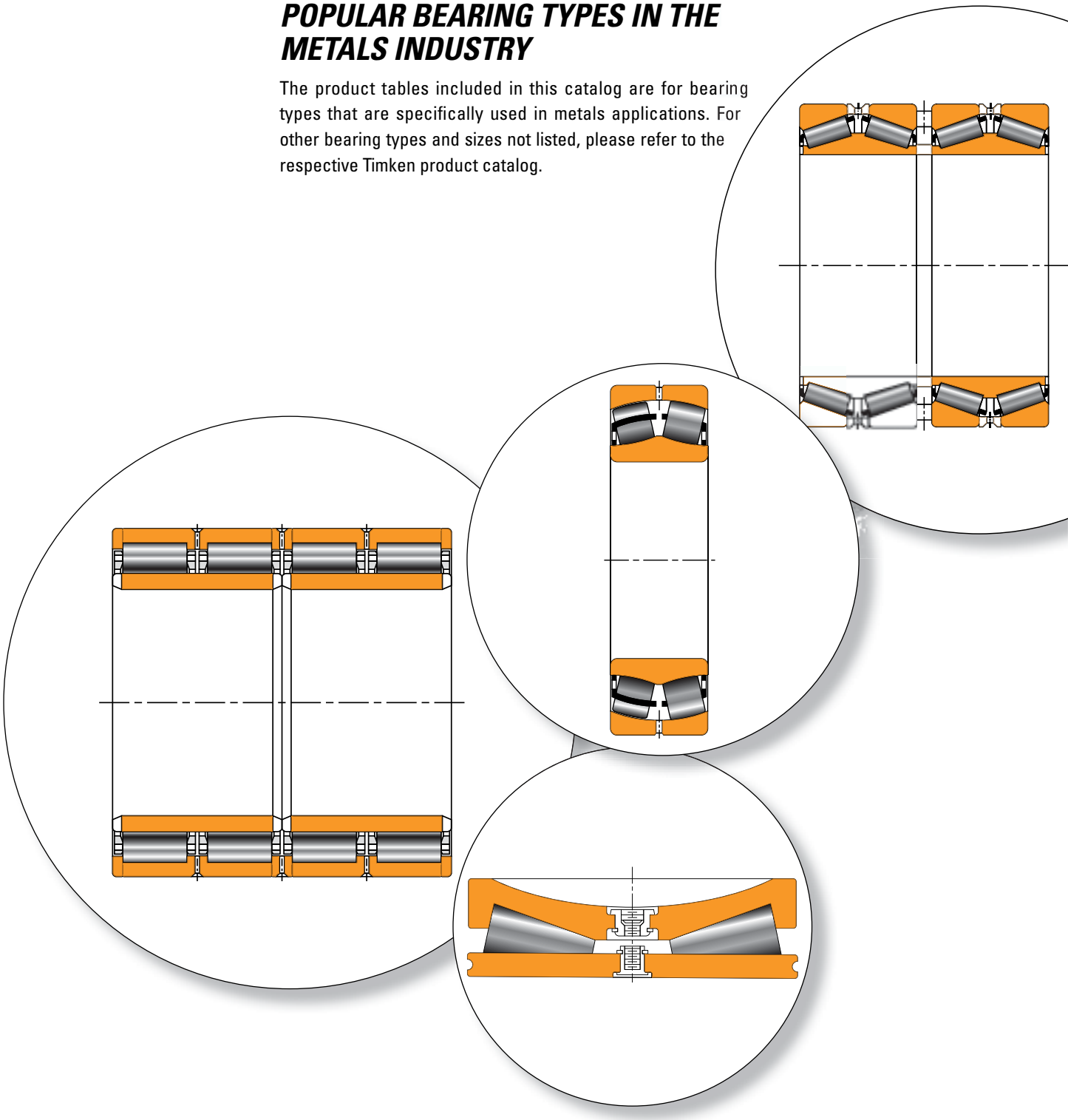

CONTINUOUS CASTING

The continuous caster presents one of the most challenging environments for bearings. Caster-roll support bearings are subjected to high loads and low rotational speeds, often at elevated temperatures. Below the bender segments, the Timken ideal solution combines our high-performance spherical roller bearing for the fixed position and our latest design innovation, the Timken® ADAPT™ bearing, for the floating position.

SPHERICAL ROLLER BEARINGS

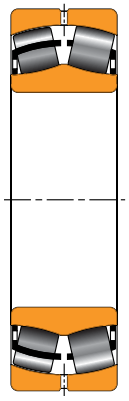

EJ TYPE

Composition: One double inner ring, one double outer ring and two rows of spherical rollers with stamped steel cages.

Application: Continuous caster rolls; fixed and float positions.

Note: Refer to Timken® Spherical Roller Bearing Catalog (order no. 10446) for more information on our complete range, including EM type brass cage designs.

Fig. 1. EJ type.

NEEDLE ROLLER BEARINGS

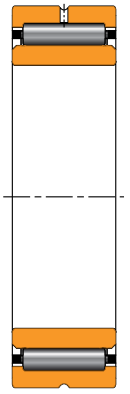

NA TYPE

Composition: One single inner ring, one single outer ring, one row or two rows of caged needle rollers.

Application: Continuous caster bender section support rolls.

Fig. 2. NA type.

CYLINDRICAL ROLLER BEARINGS

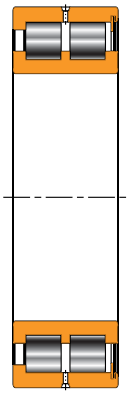

NNCF TYPE

Composition: One double inner ring, one double outer ring, two rows of full-complement cylindrical rollers.

Application: Continuous caster bender section support rolls.

Fig. 3. NNCF type.

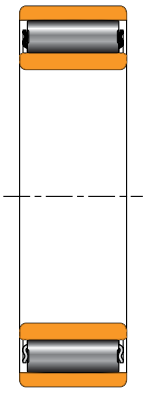

ADAPT™

Composition: One single cylindrical inner ring, one single profiled outer ring, full-complement design with a profiled roller/retainer assembly.

Application: Continuous caster rolls; float position.

Fig. 4. ADAPT™.

ROLLING MILL STANDS – ROLL NECK BEARINGS

Rolling mill applications typically encounter very high radial loads and varying degrees of axial load while running at slow to high speed. To accommodate these operating conditions, roll neck bearings must have enhanced contact surfaces, material strength properties, and internal geometry and cage characteristics. Available designs include two-, four- or six-row tapered roller bearings, and multi-row cylindrical bearings.

CYLINDRICAL ROLLER BEARINGS

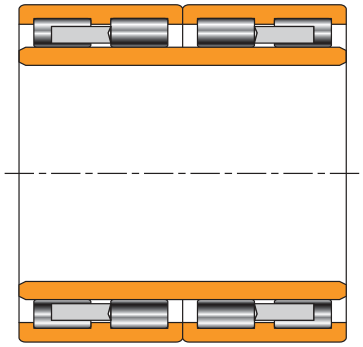

Fig. 5. RY and RYL.

RY AND RYL

Composition: Typically one single-piece inner ring, two outer rings with triple flanges (solid ribs). Fully machined brass (RY) or steel (RYL) cages.

Application: Roll neck for long product mills.

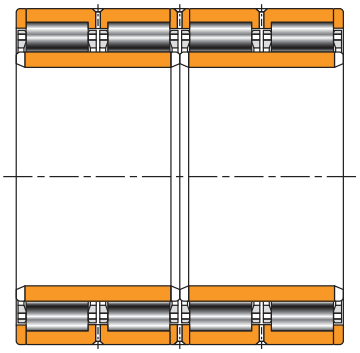

Fig. 6. RX.

RX

Composition: Two cylindrical inner rings, two flanged outer rings and separated rib rings for roller spacing. Typically includes a pin-type cage(s).

Application: Backup roll radial position for flat product mills. Roll neck for long product mills.

TAPERED ROLLER BEARINGS

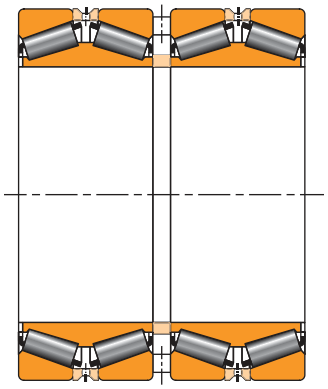

Fig. 7. TQOW.

TQOW

Composition: Two double cones with tapered rollers, one cone spacer, two single cups, two cup spacers, one double cup.

Application: Work rolls, intermediate rolls and backup rolls. Typically used in mills with speeds up to 800 m/min. (2600 ft./min.) when used on backup rolls.

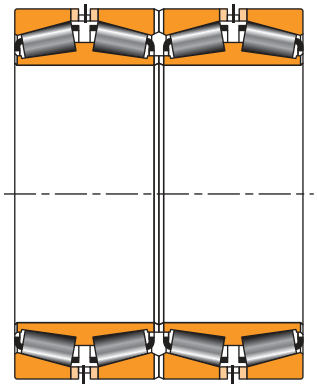

Fig. 8. 2TDIW.

2TDIW

Composition: Two double cones with tapered rollers, four single cups, one or no cone spacer, and two or three cup spacers.

Application: Work rolls, intermediate rolls and backup rolls. Typically used in mills with speeds up to 800 m/min. (2600 ft./min.) when used on backup rolls.

TAPERED ROLLER BEARINGS *– continued*

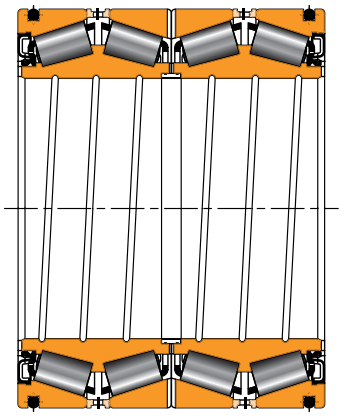

Fig. 9. Sealed roll neck bearing.

SEALED ROLL NECK BEARING

Composition: Same construction as the 2TDIW, plus two main seals, one bore seal, and O-ring to seal statically in the chock bore.

Application: Primarily used in work rolls and intermediate rolls.

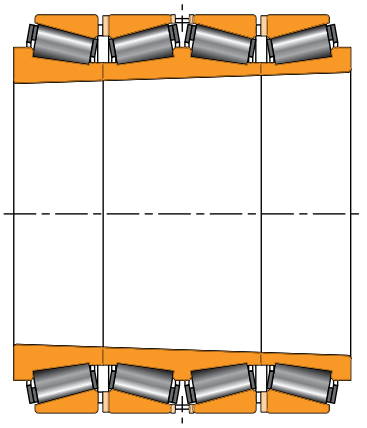

Fig. 12. TQITS.

TQITS

Composition: One double cone and two single cones all with matched tapered bores, four single cups, three cup spacers.

Application: Backup rolls, typically used in high-speed, high precision mills where strip speeds exceed 800 m/min. (2600 ft./min.).

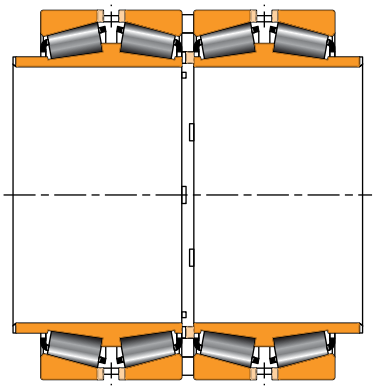

Fig. 10. TQOWE.

TQOWE AND TQITSE

Composition: Same construction as the TQOW and TQITS respectively with cone extension on one or both sides of the bearing.

Application: Work rolls, intermediate rolls and backup rolls.

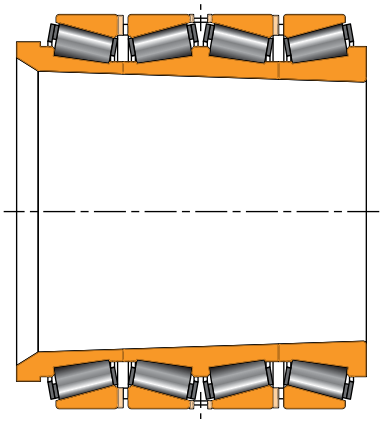

Fig. 11. TQITSE.

AUXILIARY EQUIPMENT

Timken offers a wide range of bearings for auxiliary equipment applications such as gear drives, table rolls, coilers, levelers, pinion stands and handling equipment. This catalog includes part listings for the below bearing types. For other bearing types, please refer to the respective product catalog.

TAPERED ROLLER BEARINGS

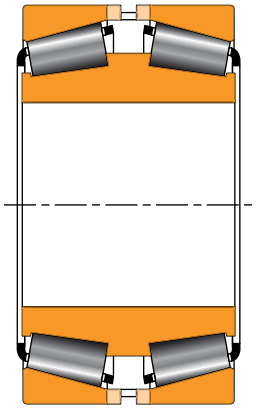

Fig. 13. TDIT.

TDIT

Composition: One double cone with tapered bore, two single cups and one cup spacer.

Application: Roll neck position for low-to-medium loaded application.

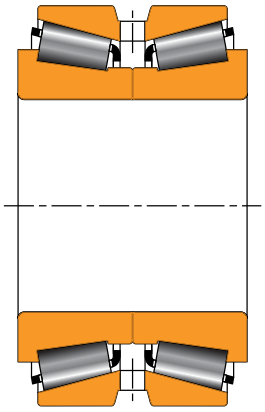

Fig. 15. TNAT.

TNAT

Composition: Two single cones with tapered bore, one double cup with lubrication groove and holes.

Application: Roll neck position for high-speed, pre-stressed mills.

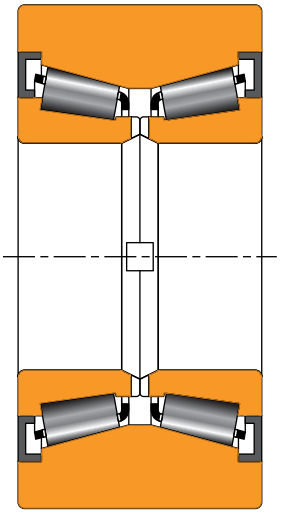

Fig. 14. TNASWH.

TNASWH

Composition: Same as the TNA bearing with one heavy section double cup and two closures.

Application: Levelers, chock wheels, conveyor car wheels, various railcars and crane sheaves, and mast roller guide bearings.

For additional products, please see the Timken Tapered Roller Bearing Catalog (order no. 10481).

THRUST BEARINGS

Applications mounted with cylindrical roller bearings, oil-film bearings or systems with axial shift or roll crossing, generally need an additional thrust bearing.

THRUST TAPERED ROLLER BEARINGS

TDIK

Composition: One double cone with tapered rollers, two single cups, spacer or spacerless.

Application: Backup and work roll thrust positions for flat product mills and long product mills.

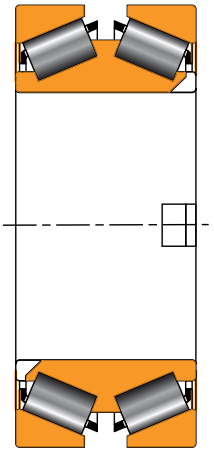

Fig. 16. TDIK.

TTDFLK, TTDW AND TTDWK

Composition: One double central ring with tapered rollers, two outer rings.

Application: Heavy-duty flat product mills with axial shift and long product mills.

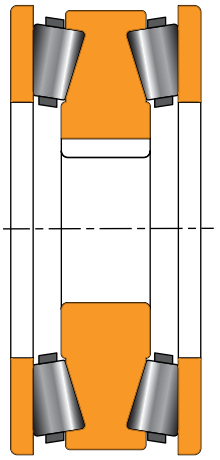

Fig. 19. TTDWK.

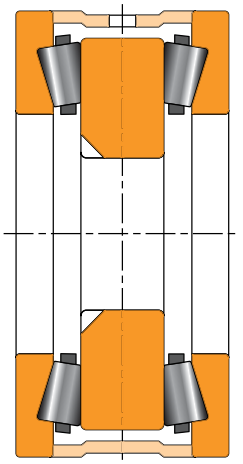

Fig. 20. TTDFLK.

AXIAL TAPERED ROLLER BEARINGS FOR SCREWDOWN SYSTEMS

TTHDFLSX AND TTHDFLSV

Composition: One lower flat race and one upper tapered race with either a convex (TTHDFLSX) or concave (TTHDFLSV) profile. Both designs are also available with a lower tapered race design (TTHSX and TTHDSV).

Application: Screwdown thrust bearing.

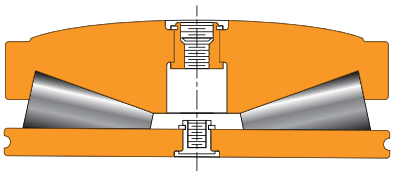

Fig. 17. TTHDFLSX.

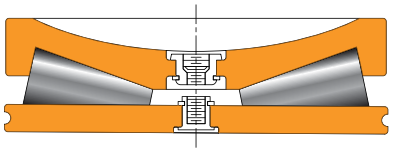

Fig. 18. TTHDFLSV.

THRUST SPHERICAL ROLLER BEARING

TSR

Composition: One single inner ring with spherical rollers with cage retainer and one single outer ring.

Application: Thrust position for flat product mills and long product mills. Thrust position for gearboxes and auxiliary equipment.

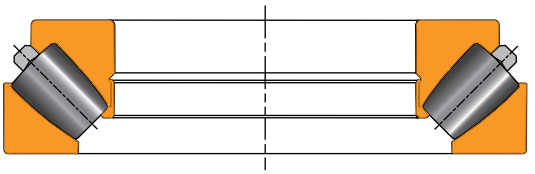

Fig. 21. TSR-EM.

ENGINEERING

Timken bearings are suitable for broad ranges of speed, many combinations of radial and thrust loads and harsh applications of the metal industries. To achieve optimum design, customers need to refer to the relevant engineering data for information on bearing features and characteristics. This engineering section, although not intended to be comprehensive, intends to serve as a useful guide in bearing selection. To view the complete engineering manual – metals industry edition, please visit www.timken.com. To order a catalog, contact your Timken sales engineer and request a copy of order number 10668.

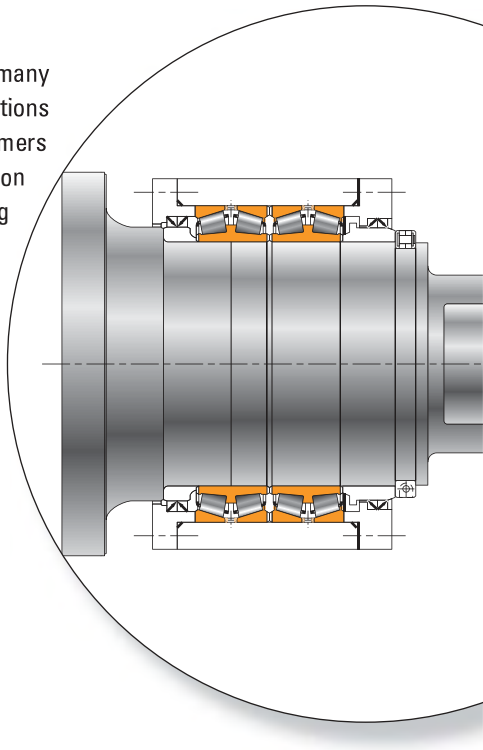

The following topics are covered within this section:

Explanation of Timken Bearing Symbols 18
Bearing Tolerances 18
Bearing Fitting Guidelines 34
Bearing Radial Internal Clearances 45

EXPLANATION OF TIMKEN BEARING SYMBOLS

The Timken roller bearing's most important dimensions are:

- The inside diameter of the inner ring, (or cone for tapered roller bearings) is called the bore (d). This diameter must be correct in order to fit the bearing onto the shaft.
- The outside diameter of the outer ring, (or cup for tapered roller bearings), is known as the outside diameter (O.D. [D]). This diameter must be correct in order to fit the bearing into the housing.
- The other basic dimension is the bearing width (B). There are three dimensions to consider in tapered roller bearings – cone width (marked B), cup width (marked C) and overall width (marked T).

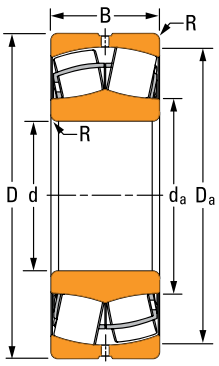

Fig. 22. Spherical roller bearing.

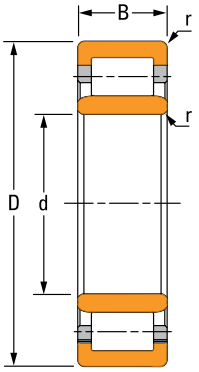

Fig. 23. Cylindrical roller bearing.

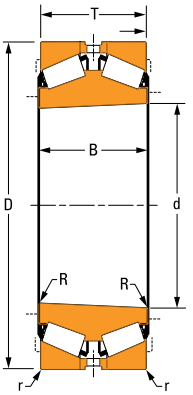

Fig. 24. Taper roller bearing (Type TDIT).

BEARING TOLERANCES

Timken roller bearings are manufactured to a number of specifications, with each having classes that define tolerances on dimensions such as bore, O.D., width and runout. In addition, bearings are produced in both inch and metric systems with the boundary dimension tolerances being different for these two systems. The major difference between the two systems is that inch bearings have historically been manufactured to positive bore and O.D. tolerances, whereas metric bearings have been manufactured to negative tolerances.

Table 1 summarizes the different specifications and classes for tapered roller, cylindrical roller and spherical roller bearings.

Boundary dimension tolerances are listed in the following tables. These tolerances are provided for bearings used in metals applications in conjunction with the bearing fitting practices offered in later sections.

TABLE 1. BEARING SPECIFICATIONS AND CLASSES

System	Specification	Bearing Type	Standard Bearing Class		Precision Bearing Class
Metric	Timken	Tapered Roller Bearings	K	N	C
	ISO/DIN	All Bearing Types	P0	P6	P5
	ABMA	Cylindrical, Needle Roller Bearings, Spherical Roller Bearings, ADAPT™	RBEC 1	RBEC 3	RBEC 5
		Ball Bearings	ABEC 1	ABEC 3	ABEC 5
		Tapered Roller Bearings	K	N	C
Inch	Timken ABMA	Tapered Roller Bearings	4	2	3

NOMENCLATURE

Dimension deviation:

Δ_{dmp}: Single plane mean bore diameter deviation
Δ_{Dmp}: Single plane mean outside diameter deviation
Δ_{Bs}: Inner ring width deviation, i.e. width tolerance
Δ_{Cs}: Outer ring width deviation, i.e. width tolerance

Rotation tolerance:

K_{ia}: Inner ring radial runout
K_{ea}: Outer ring radial runout

The term deviation is defined as the difference between a single ring dimension and the nominal dimension, therefore being the tolerance range for the listed parameter.

BEARING CLEARANCES

Radial internal clearance (RIC) is the radial play within a spherical, cylindrical, needle or ADAPT™ bearing. Bench end play (BEP) is the axial internal clearance in a tapered roller bearing before the bearing is to be mounted. For more information, see page 86 of the Timken Engineering Manual - Metals Industry Edition (order no. 10668) or contact your Timken engineer.

SPHERICAL, CYLINDRICAL, NEEDLE AND ADAPT™ BEARINGS

Standard Timken® spherical roller, cylindrical roller, needle roller bearings and ADAPT™ bearings maintain normal tolerances according to the current ISO 492 standard.

Spherical roller bearing standard tolerances:
P0 boundary class tolerances and P6 radial runouts

Cylindrical roller bearing standard tolerances:
Four row – P6 boundary class tolerances and P5 radial runouts

Needle roller bearing standard tolerances:
Single row – P0 boundary class tolerance and P6 radial runouts
Double row – P6 boundary class tolerance and P5 radial runouts

ADAPT standard tolerances:
P0 boundary class tolerances and P6 radial runouts

INNER RING TOLERANCES

TABLE 2. SPHERICAL, CYLINDRICAL, NEEDLE AND ADAPT™ BEARING BORE TOLERANCES – INNER RING (METRIC)

Bearing Types	Bore		Bearing Deviation[1] Δ_{dmp}	
	Over	Incl.	P0	P6
	mm in.	**mm** in.	**mm** in.	**mm** in.
Spherical Roller Bearing Cylindrical Roller Bearing Needle Roller Bearing ADAPT	**18.000** 0.7087	**30.000** 1.1811	**-0.010** -0.0004	**-0.008** -0.0003
	30.000 1.1811	**50.000** 1.9685	**-0.012** -0.0005	**-0.010** -0.0004
	50.000 1.9685	**80.000** 3.1496	**-0.015** -0.0006	**-0.012** -0.0005
	80.000 3.1496	**120.000** 4.7244	**-0.020** -0.0008	**-0.015** -0.0006
	120.000 4.7244	**180.000** 7.0866	**-0.025** -0.0010	**-0.018** -0.0007
	180.000 7.0866	**250.000** 9.8425	**-0.030** -0.0012	**-0.022** -0.0009
	250.000 9.8425	**315.000** 12.4016	**-0.035** -0.0014	**-0.025** -0.0010
	315.000 12.4016	**400.000** 15.7480	**-0.040** -0.0016	**-0.030** -0.0012
	400.000 15.7480	**500.000** 19.6850	**-0.045** -0.0018	**-0.035** -0.0014
	500.000 19.6850	**630.000** 24.8031	**-0.050** -0.0020	**-0.040** -0.0016
	630.000 24.8031	**800.000** 31.4961	**-0.075** -0.0030	–

[1]Tolerance range is from +0 to value listed.

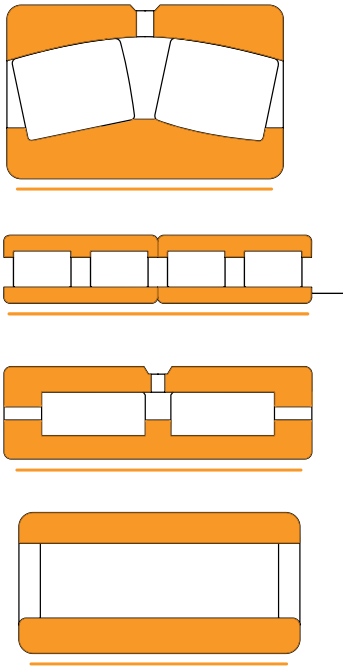

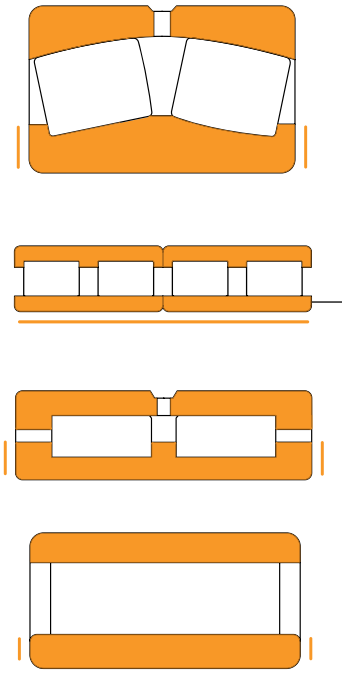

TABLE 3. SPHERICAL, CYLINDRICAL, NEEDLE AND ADAPT BEARING WIDTH TOLERANCES – INNER RING (METRIC)

Bearing Types	Bore Over	Bore Incl.	Width Deviation[1] Δ_{Bs} P0, P6
	mm in.	**mm** in.	**mm** in.
Spherical Roller Bearing Cylindrical Roller Bearing Needle Roller Bearing ADAPT	**18.000** 0.7087	**50.000** 1.9685	**-0.120** -0.0047
	50.000 1.9685	**80.000** 3.1496	**-0.150** -0.0059
	80.000 3.1496	**120.000** 4.7244	**-0.200** -0.0079
	120.000 4.7244	**180.000** 7.0866	**-0.250** -0.0098
	180.000 7.0866	**250.000** 9.8425	**-0.300** -0.0118
	250.000 9.8425	**315.000** 12.4016	**-0.350** -0.0138
	315.000 12.4016	**400.000** 15.7480	**-0.400** -0.0157
	400.000 15.7480	**500.000** 19.6850	**-0.450** -0.0177
	500.000 19.6850	**630.000** 24.8031	**-0.500** -0.0197
	630.000 24.8031	**800.000** 31.4961	**-0.750** -0.0295

[1]Tolerance range is from +0 to value listed.

OUTER RING TOLERANCES

TABLE 4. SPHERICAL, CYLINDRICAL, NEEDLE AND ADAPT BEARING OUTER DIAMETER TOLERANCES – OUTER RING (METRIC)

Bearing Types	Bearing Outside Diameter		Outside Deviation[1] Δ_{Dmp}	
	Over	Incl.	P0	P6
	mm in.	**mm** in.	**mm** in.	**mm** in.
Spherical Roller Bearing Cylindrical Roller Bearing Needle Roller Bearing ADAPT	**50.000** 1.9685	**80.000** 3.1496	**-0.013** -0.0005	**-0.011** -0.0004
	80.000 3.1496	**120.000** 4.7244	**-0.015** -0.0006	**-0.013** -0.0005
	120.000 4.7244	**150.000** 5.9055	**-0.018** -0.0007	**-0.015** -0.0006
	150.000 5.9055	**180.000** 7.0866	**-0.025** -0.0010	**-0.018** -0.0007
	180.000 7.0866	**250.000** 9.8425	**-0.030** -0.0012	**-0.020** -0.0008
	250.000 9.8425	**315.000** 12.4016	**-0.035** -0.0014	**-0.025** -0.0010
	315.000 12.4016	**400.000** 15.7480	**-0.040** -0.0016	**-0.028** -0.0011
	400.000 15.7480	**500.000** 19.6850	**-0.045** -0.0018	**-0.033** -0.0013
	500.000 19.6850	**630.000** 24.8031	**-0.050** -0.0020	**-0.038** -0.0015
	630.000 24.8031	**800.000** 31.4961	**-0.075** -0.0030	**-0.045** -0.0018
	800.000 31.4961	**1000.000** 39.3701	**-0.100** -0.0040	**-0.060** -0.0024
	1000.000 39.3701	**1250.000** 49.2126	**-0.125** -0.0050	–

[1]Tolerance range is from +0 to value listed.

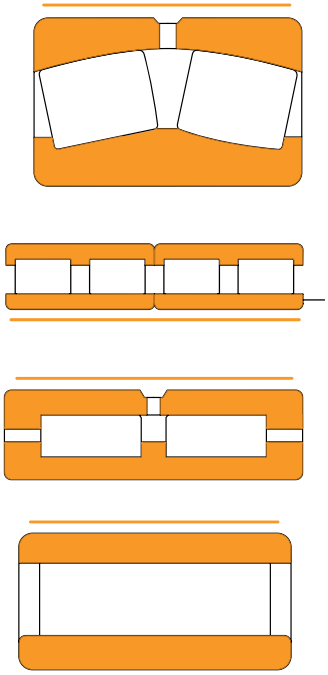

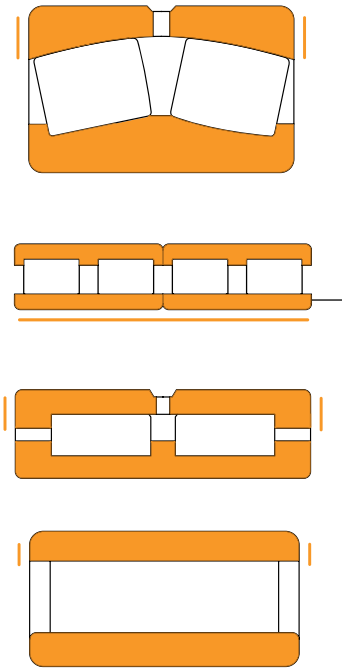

TABLE 5. SPHERICAL, CYLINDRICAL, NEEDLE AND ADAPT BEARING WIDTH TOLERANCES – OUTER RING (METRIC)

Bearing Types	Bore Over	Bore Incl.	Width Deviation[1] Δ_{Cs} P0, P6
	mm in.	**mm** in.	**mm** in.
Spherical Roller Bearing Cylindrical Roller Bearing Needle Roller Bearing ADAPT	**18.000** 0.7087	**50.000** 1.9685	**-0.120** -0.0047
	50.000 1.9685	**80.000** 3.1496	**-0.150** -0.0059
	80.000 3.1496	**120.000** 4.7244	**-0.200** -0.0079
	120.000 4.7244	**180.000** 7.0866	**-0.250** -0.0098
	180.000 7.0866	**250.000** 9.8425	**-0.300** -0.0118
	250.000 9.8425	**315.000** 12.4016	**-0.350** -0.0138
	315.000 12.4016	**400.000** 15.7480	**-0.400** -0.0157
	400.000 15.7480	**500.000** 19.6850	**-0.450** -0.0177
	500.000 19.6850	**630.000** 24.8031	**-0.500** -0.0197
	630.000 24.8031	**800.000** 31.4961	**-0.750** -0.0295

[1]Tolerance range is from +0 to value listed.

RADIAL TAPERED ROLLER BEARINGS

INCH BEARINGS

Inch system bearings are manufactured to a number of tolerance classes. Classes 4 and 2 are often referred to as standard classes.

Cone bore tolerances

TABLE 6. TAPERED ROLLER BEARING TOLERANCES – CONE BORE (INCH)[1]

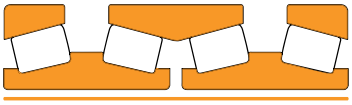

Bearing Types	Bore		Bearing Class			
			4		2	
	Over	Incl.	Max.	Min.	Max.	Min.
	mm in.	mm in.	mm in.	mm in.	mm in.	mm in.
TQOW 2TDIW SRNB TQITS TDIT TDIK	**30.000** 1.1811	**76.200** 3.0000	**+0.013** +0.0005	**0.000** 0.0000	**+0.013** +0.0005	**0.000** 0.0000
	76.200 3.0000	**304.800** 12.0000	**+0.025** +0.0010	**0.000** 0.0000	**+0.025** +0.0010	**0.000** 0.0000
	304.800 12.0000	**609.600** 24.0000	–	–	**+0.051** +0.0020	**0.000** 0.0000
	609.600 24.0000	**914.400** 36.0000	**+0.076** +0.0030	**0.000** 0.0000	–	–
	914.400 36.0000	**1219.200** 48.0000	**+0.102** +0.0040	**0.000** 0.0000	–	–
	1219.200 48.0000	–	**+0.127** +0.0050	**0.000** 0.0000	–	–

[1]Except for non-adjustable (TNA) bearings.

TABLE 7. TAPERED ROLLER BEARING TOLERANCES – CONE BORE FOR NON-ADJUSTABLE TNA BEARING TYPES (INCH)

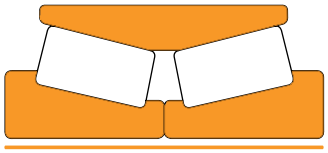

Bearing Types	Bore		Bearing Class			
			4		2	
	Over	Incl.	Max.	Min.	Max.	Min.
	mm in.	mm in.	mm in.	mm in.	mm in.	mm in.
TNAT TNASWH	**30.000** 1.1811	**76.200** 3.0000	**+0.013** +0.0005	**0.000** 0.0000	**+0.013** +0.0005	**0.000** 0.0000
	76.200 3.0000	**304.800** 12.0000	**+0.038** +0.0015	**0.000** 0.0000	**+0.038** +0.0015	**0.000** 0.0000
	304.800 12.0000	**609.600** 24.0000	–	–	**+0.051** +0.0020	**0.000** 0.0000
	609.600 24.0000	**914.400** 36.0000	**+0.076** +0.0030	**0.000** 0.0000	–	–
	914.400 36.0000	**1219.200** 48.0000	**+0.102** +0.0040	**0.000** 0.0000	–	–
	1219.200 48.0000	–	**+0.127** +0.0050	**0.000** 0.0000	–	–

Cup O.D. tolerances

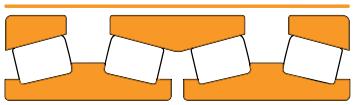

TABLE 8. TAPERED ROLLER BEARING TOLERANCES – CUP OUTSIDE DIAMETER (INCH)

Bearing Types	Bearing Outside Diameter		Bearing Class			
			4		2	
	Over	Incl.	Max.	Min.	Max.	Min.
	mm in.	**mm** in.	**mm** in.	**mm** in.	**mm** in.	**mm** in.
TQOW 2TDIW SRNB TQITS TDIT TNAT TDIK TNASWH	**50.000** 1.9685	**304.800** 12.0000	**+0.025** +0.0010	**0.000** 0.0000	**+0.025** +0.0010	**0.000** 0.0000
	304.800 12.0000	**609.600** 24.0000	**+0.051** +0.0020	**0.000** 0.0000	**+0.051** +0.0020	**0.000** 0.0000
	609.600 24.0000	**914.400** 36.0000	**+0.076** +0.0030	**0.000** 0.0000	**+0.076** +0.0030	**0.000** 0.0000
	914.400 36.0000	**1219.200** 48.0000	**+0.102** +0.0040	**0.000** 0.0000	–	–
	1219.200 48.0000	–	**+0.127** +0.0050	**0.000** 0.0000	–	–

Width tolerances

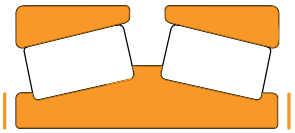

TABLE 9. TAPERED ROLLER BEARING TOLERANCES – CONE WIDTH (TDIT, TDIK) (INCH)

Bearing Types	Bore		Bearing Class			
			4		2	
	Over	Incl.	Max.	Min.	Max.	Min.
	mm in.	**mm** in.	**mm** in.	**mm** in.	**mm** in.	**mm** in.
TDIT TDIK	All Sizes		**+0.076** +0.0030	**-0.254** -0.0100	**+0.076** +0.0030	**-0.254** -0.0100

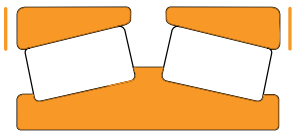

TABLE 10. TAPERED ROLLER BEARING TOLERANCES – CUP WIDTH (TNAT, TNASWH) (INCH)

Bearing Types	Bearing Outside Diameter		Bearing Class			
			4		2	
	Over	Incl.	Max.	Min.	Max.	Min.
	mm in.	**mm** in.	**mm** in.	**mm** in.	**mm** in.	**mm** in.
TNAT TNASWH	All Sizes		**+0.051** +0.0020	**-0.254** -0.0100	**+0.051** +0.0020	**-0.254** -0.0100

Width tolerances *– continued*

TABLE 11. TAPERED ROLLER BEARING TOLERANCES – OVERALL BEARING WIDTH (TNAT, TNASWH) (INCH)

Bearing Types	Bore		Bearing Class			
			4		2	
	Over	Incl.	Max.	Min.	Max.	Min.
	mm in.	**mm** in.	**mm** in.	**mm** in.	**mm** in.	**mm** in.
TNAT TNASWH	**30.000** 1.1811	**127.000** 5.0000	–	–	**+0.254** +0.0100	**0.000** 0.0000
	127.000 5.0000	–	–	–	**+0.762** +0.0300	**0.000** 0.0000

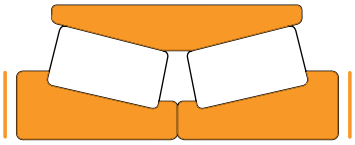

TABLE 12. TAPERED ROLLER BEARING TOLERANCES – OVERALL BEARING WIDTH (TDIT, TDIK) (INCH)

Bearing Types	Bore		Bearing Class			
			4		2	
	Over	Incl.	Max.	Min.	Max.	Min.
	mm in.	**mm** in.	**mm** in.	**mm** in.	**mm** in.	**mm** in.
TDIT TDIK	**0.000** 0.0000	**101.600** 4.0000	**+0.406** +0.0160	**0.000** 0.0000	**+0.406** +0.0160	**0.000** 0.0000
	101.600 4.0000	**304.800** 12.0000	**+0.711** +0.0280	**-0.508** -0.0200	**+0.406** +0.0160	**-0.203** -0.0080
	304.800 12.0000	**609.600** 24.0000	–	–	**+0.762** +0.0300	**-0.762** -0.0300
	609.600 24.0000	–	**+0.762** +0.0300	**-0.762** -0.0300	–	–

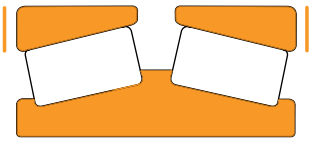

NOTE: Overall bearing width tolerances do not take into account the tolerance on the BEP.

Width tolerances *– continued*

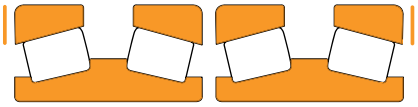

TABLE 13. TAPERED ROLLER BEARING TOLERANCES – OVERALL BEARING WIDTH (2TDIW) (INCH)

Bearing Types	Bore		Bearing Class			
			4		2	
	Over	Incl.	Max.	Min.	Max.	Min.
	mm in.	**mm** in.	**mm** in.	**mm** in.	**mm** in.	**mm** in.
2TDIW	All sizes		**+0.762** +0.0300	**-0.762** -0.0300	**+0.762** +0.0300	**-0.762** -0.0300

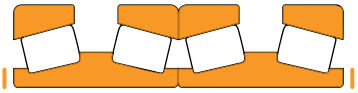

TABLE 14. TAPERED ROLLER BEARING TOLERANCES – OVERALL CONE WIDTH (2TDIW ABBUTING CONES) (INCH)

Bearing Types	Bore		Bearing Class			
			4		2	
	Over	Incl.	Max.	Min.	Max.	Min.
	mm in.	**mm** in.	**mm** in.	**mm** in.	**mm** in.	**mm** in.
2TDIW ABBUTING CONES	All sizes		**+0.152** +0.0060	**-0.508** -0.0200	**+0.152** +0.0060	**-0.508** -0.0200

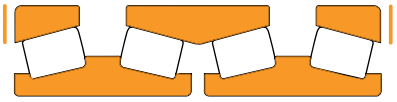

TABLE 15. TAPERED ROLLER BEARING TOLERANCES – OVERALL BEARING WIDTH (TQOW) (INCH)

Bearing Types	Bore		Bearing Class			
			4		2	
	Over	Incl.	Max.	Min.	Max.	Min.
	mm in.	**mm** in.	**mm** in.	**mm** in.	**mm** in.	**mm** in.
TQOW	All sizes		**+1.524** +0.0600	**-1.524** -0.0600	**+1.524** +0.0600	**-1.524** -0.0600

NOTE: Overall bearing width tolerances do not take into account the tolerance on the BEP.

METRIC BEARINGS

Cone bore tolerances

Metric system bearings are manufactured to a number of tolerance classes. Classes K and N are often referred to as standard classes.

TABLE 16. TAPERED ROLLER BEARING TOLERANCES – CONE BORE (METRIC)

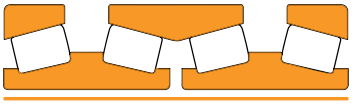

Bearing Types	Bore		Bearing Class			
			K		N	
	Over	Incl.	Max.	Min.	Max.	Min.
	mm in.	**mm** in.	**mm** in.	**mm** in.	**mm** in.	**mm** in.
TQOW 2TDIW SRNB TQITS TDIT TDIK TNAT TNASWH	**30.000** 1.1811	**50.000** 1.9685	**+0.000** +0.0000	**-0.012** -0.0005	**+0.000** +0.0000	**-0.012** -0.0005
	50.000 1.9685	**80.000** 3.1496	**+0.000** +0.0000	**-0.015** -0.0006	**+0.000** +0.0000	**-0.015** -0.0006
	80.000 3.1496	**120.000** 4.7244	**+0.000** +0.0000	**-0.020** -0.0008	**+0.000** +0.0000	**-0.020** -0.0008
	120.000 4.7244	**180.000** 7.0886	**+0.000** +0.0000	**-0.025** -0.0010	**+0.000** +0.0000	**-0.025** -0.0010
	180.000 7.0866	**250.000** 9.8425	**+0.000** +0.0000	**-0.030** -0.0012	**+0.000** +0.0000	**-0.030** -0.0012
	250.000 9.8425	**315.000** 12.4016	**+0.000** +0.0000	**-0.035** -0.0014	**+0.000** +0.0000	**-0.035** -0.0014
	315.000 12.4016	**400.000** 15.7480	**+0.000** +0.0000	**-0.040** -0.0016	**+0.000** +0.0000	**-0.040** -0.0016
	400.000 15.7480	**500.000** 19.6850	**+0.000** +0.0000	**-0.045** -0.0018	**+0.000** +0.0000	**-0.045** -0.0018
	500.000 19.6850	**630.000** 24.8031	**+0.000** +0.0000	**-0.050** -0.0020	**+0.000** +0.0000	**-0.050** -0.0020
	630.000 24.8031	**800.000** 31.4961	**+0.000** +0.0000	**-0.080** -0.0031	–	–
	800.000 31.4961	**1000.000** 39.3701	**+0.000** +0.0000	**-0.100** -0.0040	–	–
	1000.000 39.3701	**1200.000** 47.2441	**+0.000** +0.0000	**-0.130** -0.0051	–	–
	1200.000 47.2441	**1600.000** 62.9921	**+0.000** +0.0000	**-0.150** -0.0065	–	–
	1600.000 62.9921	**2000.000** 78.7402	**+0.000** +0.0000	**-0.200** -0.0079	–	–
	2000.000 78.7402	–	**+0.000** +0.0000	**-0.250** -0.0098	–	–

Cup O.D. tolerances

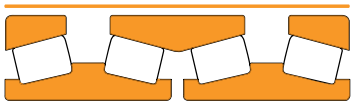

TABLE 17. TAPERED ROLLER BEARING TOLERANCES – CUP OUTSIDE DIAMETER (METRIC)

Bearing Type	Bearing Outside Diameter		Bearing Class			
			K		N	
	Over	Incl.	Max.	Min.	Max.	Min.
	mm in.	**mm** in.	**mm** in.	**mm** in.	**mm** in.	**mm** in.
TQOW 2TDIW SRNB TQIT TDIT TNAT TDIK TNASWH	**50.000** 1.9685	**80.000** 3.1496	**+0.000** +0.0000	**-0.016** -0.0006	**+0.000** +0.0000	**-0.016** -0.0006
	80.000 3.1496	**120.000** 4.7244	**+0.000** +0.0000	**-0.018** -0.0007	**+0.000** +0.0000	**-0.018** -0.0007
	120.000 4.7244	**150.000** 5.9055	**+0.000** +0.0000	**-0.020** -0.0008	**+0.000** +0.0000	**-0.020** -0.0008
	150.000 5.9055	**180.000** 7.0866	**+0.000** +0.0000	**-0.025** -0.0010	**+0.000** +0.0000	**-0.025** -0.0010
	180.000 7.0866	**250.000** 9.8425	**+0.000** +0.0000	**-0.030** -0.0012	**+0.000** +0.0000	**-0.030** -0.0012
	250.000 9.8425	**315.000** 12.4016	**+0.000** +0.0000	**-0.035** -0.0014	**+0.000** +0.0000	**-0.035** -0.0014
	315.000 12.4016	**400.000** 15.7480	**+0.000** +0.0000	**-0.040** -0.0016	**+0.000** +0.0000	**-0.040** -0.0016
	400.000 15.7480	**500.000** 19.6850	**+0.000** +0.0000	**-0.045** -0.0018	**+0.000** +0.0000	**-0.045** -0.0018
	500.000 19.6850	**630.000** 24.8031	**+0.000** +0.0000	**-0.050** -0.0020	**+0.000** +0.0000	**-0.050** -0.0020
	630.000 24.8031	**800.000** 31.4961	**+0.000** +0.0000	**-0.075** -0.0030	–	–
	800.000 31.4961	**1000.000** 39.3701	**+0.000** +0.0000	**-0.100** -0.0040	–	–
	1000.000 39.3701	**1200.000** 47.2441	**+0.000** +0.0000	**-0.130** -0.0051	–	–
	1200.000 47.2441	**1600.000** 62.9921	**+0.000** +0.0000	**-0.165** -0.0065	–	–
	1600.000 62.9921	**2000.000** 78.7402	**+0.000** +0.0000	**-0.200** -0.0079	–	–
	2000.000 78.7402	–	**+0.000** +0.0000	**-0.250** -0.0098	–	–

Width tolerances

TABLE 18. TAPERED ROLLER BEARING TOLERANCES – CONE WIDTH (METRIC)

Bearing Types	Bore		Bearing Class			
			K		N	
	Over	Incl.	Max.	Min.	Max.	Min.
	mm in.	**mm** in.	**mm** in.	**mm** in.	**mm** in.	**mm** in.
TDIT TDIK	**30.000** 1.1811	**50.000** 1.9685	**+0.000** +0.0000	**-0.100** -0.0040	**+0.000** +0.0000	**-0.050** -0.0020
	50.000 1.9685	**120.000** 4.7244	**+0.000** +0.0000	**-0.150** -0.0059	**+0.000** +0.0000	**-0.050** -0.0020
	120.000 4.7244	**180.000** 7.0866	**+0.000** +0.0000	**-0.200** -0.0079	**+0.000** +0.0000	**-0.050** -0.0020
	180.000 7.0866	**315.000** 12.4016	**+0.000** +0.0000	**-0.200** -0.0079	**+0.000** +0.0000	**-0.050** -0.0020
	315.000 12.4016	**500.000** 19.6850	**+0.000** +0.0000	**-0.250** -0.0098	**+0.000** +0.0000	**-0.050** -0.0020
	500.000 19.6850	**630.000** 24.8031	**+0.000** +0.0000	**-0.250** -0.0098	**+0.000** +0.0000	**-0.350** -0.0138
	630.000 24.8031	**1200.000** 47.2441	**+0.000** +0.0000	**-0.300** -0.0118	–	–
	1200.000 47.2441	**1600.000** 62.9921	**+0.000** +0.0000	**-0.350** -0.0138	–	–
	1600.000 62.9921	–	**+0.000** +0.0000	**-0.350** -0.0138	–	–

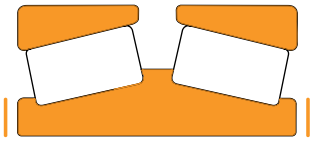

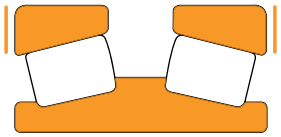

TABLE 19. TAPERED ROLLER BEARING TOLERANCES – OVERALL BEARING WIDTH (TDIK, TDIT) (METRIC)

Bearing Types	Bore		Bearing Class			
			K		N	
	Over	Incl.	Max.	Min.	Max.	Min.
	mm in.	**mm** in.	**mm** in.	**mm** in.	**mm** in.	**mm** in.
TDIT TDIK	**30.000** 1.1811	**50.000** 1.9685	**+0.400** +0.0157	**-0.100** -0.0039	**+0.200** +0.0079	**-0.050** -0.0020
	50.000 1.9685	**80.000** 3.1496	**+0.400** +0.0157	**-0.150** -0.0059	**+0.200** +0.0079	**-0.050** -0.0020
	80.000 3.1496	**120.000** 4.7244	**+0.400** +0.0157	**-0.550** -0.0217	**+0.200** +0.0079	**-0.050** -0.0020
	120.000 4.7244	**250.000** 9.8425	**+0.400** +0.0157	**-0.600** -0.0236	**+0.300** +0.0118	**-0.050** -0.0020
	250.000 9.8425	**315.000** 12.4016	**+0.400** +0.0157	**-0.600** -0.0236	**+0.400** +0.0157	**-0.050** -0.0020
	315.000 12.4016	**400.000** 15.7480	**+0.400** +0.0157	**-0.650** -0.0256	**+0.400** +0.0157	**-0.050** -0.0020
	400.000 15.7480	**500.000** 19.6850	**+0.500** +0.0197	**-0.850** -0.0335	**+0.400** +0.0157	**-0.050** -0.0020
	500.000 19.6850	**630.000** 24.8031	**+0.500** +0.0197	**-0.850** -0.0335	–	–
	630.000 24.8031	**800.000** 31.4961	**+0.500** +0.0197	**-0.900** -0.0354	–	–
	800.000 31.4961	**1000.000** 39.3701	**+0.600** +0.0236	**-0.900** -0.0354	–	–
	1000.000 39.3701	**1200.000** 47.2441	**+0.600** +0.0236	**-1.000** -0.0394	–	–
	1200.000 47.2441	–	**+0.700** +0.0276	**-1.150** -0.0453	–	–

TABLE 20. TAPERED ROLLER BEARING TOLERANCES – OVERALL BEARING WIDTH (2TDIW) (METRIC)

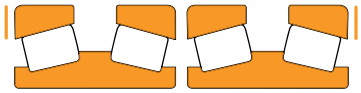

Bearing Types	Bore		Bearing Class			
			K		N	
	Over	Incl.	Max.	Min.	Max.	Min.
	mm in.	**mm** in.	**mm** in.	**mm** in.	**mm** in.	**mm** in.
2TDIW	**30.000** 1.1811	**500.000** 19.6850	**+0.800** +0.0315	**-0.800** -0.0315	**+0.800** +0.0315	**-0.800** -0.0315
	500.000 19.6850	**800.000** 31.4961	**+0.800** +0.0315	**-0.800** -0.0315	–	–
	800.000 31.4961	–	**+0.900** +0.0354	**-0.900** -0.0354	–	–

TABLE 21. TAPERED ROLLER BEARING TOLERANCES – OVERALL BEARING WIDTH (TQOW) (METRIC)

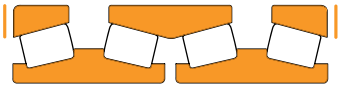

Bearing Types	Bore		Bearing Class			
			K		N	
	Over	Incl.	Max.	Min.	Max.	Min.
	mm in.	**mm** in.	**mm** in.	**mm** in.	**mm** in.	**mm** in.
TQOW	**30.000** 1.1811	**500.000** 19.6850	**+1.600** +0.0630	**-1.600** -0.0630	**+1.600** +0.0630	**-1.600** -0.0630
	500.000 19.6850	**800.000** 31.4961	**+1.600** +0.0630	**-1.600** -0.0630	–	–
	800.000 31.4961	–	**+1.600** +0.0630	**-1.600** -0.0630	–	–

TABLE 22. TAPERED ROLLER BEARING TOLERANCES – OVERALL CONE WIDTH (2TDIW) (METRIC)

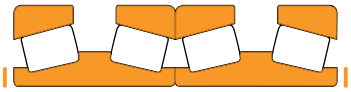

Bearing Types	Bore		Bearing Class			
			K		N	
	Over	Incl.	Max.	Min.	Max.	Min.
	mm in.	**mm** in.	**mm** in.	**mm** in.	**mm** in.	**mm** in.
2TDIW WITH ABBUTING CONES	**30.000** 1.1811	**50.000** 1.9685	**+0.000** +0.0000	**-0.200** -0.0079	**+0.000** +0.0000	**-0.100** -0.0039
	50.000 1.9685	**120.000** 4.7244	**+0.000** +0.0000	**-0.300** -0.0118	**+0.000** +0.0000	**-0.100** -0.0039
	120.000 4.7244	**315.000** 12.4016	**+0.000** +0.0000	**-0.400** -0.0157	**+0.000** +0.0000	**-0.100** -0.0039
	315.000 12.4016	**500.000** 19.6850	**+0.000** +0.0000	**-0.500** -0.0197	**+0.000** +0.0000	**-0.100** -0.0039
	500.000 19.6850	**630.000** 24.8031	**+0.000** +0.0000	**-0.500** -0.0197	–	–
	630.000 24.8031	**1200.000** 47.2441	**+0.000** +0.0000	**-0.600** -0.0236	–	–
	1200.000 47.2441	–	**+0.000** +0.0000	**-0.700** -0.0276	–	–

NOTE: Overall bearing width tolerances do not take into account the tolerance on the BEP.

THRUST TAPERED ROLLER BEARINGS

INCH BEARINGS

Bore tolerances

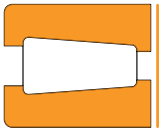

TABLE 23. THRUST TAPERED ROLLER BEARING TOLERANCES – BORE (INCH)

Bearing Types	Bore Over	Bore Incl.	Tolerance Max.	Tolerance Min.
	mm in.	**mm** in.	**mm** in.	**mm** in.
TTDK TTDW TTHDSX-1 TTHDSX-2 TTHDSV-1 TTHDSV-2	**0.000** 0.0000	**304.800** 12.0000	**+0.025** +0.0010	**+0.000** +0.0000
	304.800 12.0000	**609.600** 24.0000	**+0.051** +0.0020	**+0.000** +0.0000
	609.600 24.0000	**914.400** 36.0000	**+0.076** +0.0030	**+0.000** +0.0000
	914.400 36.0000	**1219.200** 48.0000	**+0.102** +0.0040	**+0.000** +0.0000
	1219.200 48.0000	–	**+0.127** +0.0050	**+0.000** +0.0000

Outside diameter tolerances

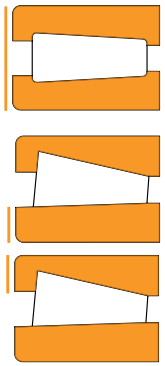

TABLE 24. THRUST TAPERED ROLLER BEARING TOLERANCES – OUTSIDE DIAMETER (INCH)

Bearing Types		Outside Diameter Over	Outside Diameter Incl.	Tolerance Max.	Tolerance Min.
		mm in.	**mm** in.	**mm** in.	**mm** in.
TTDK TTDW TTHDSX-1 TTHDSX-2 TTHDSV-1 TTHDSV-2		**0.000** 0.0000	**304.800** 12.0000	**+0.025** +0.0010	**+0.000** +0.0000
		304.800 12.0000	**609.600** 24.0000	**+0.051** +0.0020	**+0.000** +0.0000
		609.600 24.0000	**914.400** 36.0000	**+0.076** +0.0030	**+0.000** +0.0000
		914.400 36.0000	**1219.200** 48.0000	**+0.102** +0.0040	**+0.000** +0.0000
		1219.200 48.0000	–	**+0.127** +0.0050	**+0.000** +0.0000
TTHDFLSX-1 TTHDFLSX-2 TTHDFLSX-3	TTHDFLSV-1 TTHDFLSV-2 TTHDDV	**0.000** 0.0000	**317.500** 12.5000	**+0.000** +0.0000	**-0.025** -0.0010
		317.500 12.5000	**647.700** 25.5000	**+0.000** +0.0000	**-0.051** -0.0020
TTHDFLSX-1 TTHDFLSX-2 TTHDFLSX-3	TTHDFLSV-1 TTHDFLSV-2 TTHDDV	**0.000** 0.0000	**520.700** 20.5000	**+0.000** +0.0000	**-0.127** -0.0050
		520.700 20.5000	**647.700** 25.5000	**+0.000** +0.0000	**-0.254** -0.0100

Width tolerances

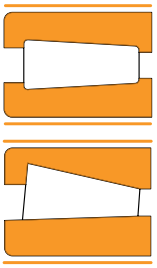

TABLE 25. THRUST TAPERED ROLLER BEARING TOLERANCES – WIDTH (INCH)

Bearing Types		Bore Over	Bore Incl.	Tolerance Max.	Tolerance Min.
		mm in.	**mm** in.	**mm** in.	**mm** in.
TTHDSX-1 TTHDSX-2	TTHDSV-1 TTHDSV-2	All Sizes		**+0.381** +0.015	**-0.381** -0.015
TTHDFLSX-1 TTHDFLSX-2 TTHDFLSX-3	TTHDFLSV-1 TTHDFLSV-2 TTHDDV				
TTDW	TTDK	All Sizes		**+0.762** +0.030	**-0.762** -0.030

METRIC BEARINGS

Bore tolerances

TABLE 26. THRUST TAPERED ROLLER BEARING TOLERANCES – BORE (METRIC)

Bearing Types	Bore		Tolerance	
	Over	Incl.	Max.	Min.
	mm in.	**mm** in.	**mm** in.	**mm** in.
TTDFLK	**80.000** 3.1496	**120.000** 4.7244	**+0.000** +0.0000	**-0.020** -0.0008
	120.000 4.7244	**180.000** 7.0866	**+0.000** +0.0000	**-0.025** -0.0010
	180.000 7.0866	**250.000** 9.8425	**+0.000** +0.0000	**-0.030** -0.0012
	250.000 9.8425	**315.000** 12.4016	**+0.000** +0.0000	**-0.035** -0.0014
	315.000 12.4016	**400.000** 15.7480	**+0.000** +0.0000	**-0.040** -0.0016
	400.000 15.7480	**500.000** 19.6850	**+0.000** +0.0000	**-0.045** -0.0018
	500.000 19.6850	**630.000** 24.8031	**+0.000** +0.0000	**-0.050** -0.0020

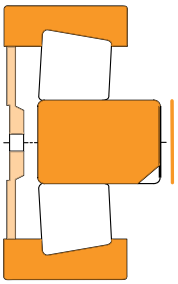

Outside diameter tolerances

TABLE 27. THRUST TAPERED ROLLER BEARING TOLERANCES – OUTSIDE DIAMETER (METRIC)

Bearing Types	Outer Diameter		Tolerance	
	Over	Incl.	Max.	Min.
	mm in.	**mm** in.	**mm** in.	**mm** in.
TTDFLK	**80.000** 3.1496	**120.000** 4.7244	**+0.000** +0.0000	**-0.022** -0.0009
	120.000 4.7244	**180.000** 7.0866	**+0.000** +0.0000	**-0.025** -0.0010
	180.000 7.0866	**250.000** 9.8425	**+0.000** +0.0000	**-0.030** -0.0012
	250.000 9.8425	**315.000** 12.4016	**+0.000** +0.0000	**-0.035** -0.0014
	315.000 12.4016	**400.000** 15.7480	**+0.000** +0.0000	**-0.040** -0.0016
	400.000 15.7480	**500.000** 19.6850	**+0.000** +0.0000	**-0.045** -0.0018
	500.000 19.6850	**630.000** 24.8031	**+0.000** +0.0000	**-0.050** -0.0020
	630.000 24.8031	**800.000** 31.4961	**+0.000** +0.0000	**-0.075** -0.0030
	800.000 31.4961	**1000.000** 39.3701	**+0.000** +0.0000	**-0.100** -0.0039
	1000.000 39.3701	**1250.000** 49.2126	**+0.000** +0.0000	**-0.125** -0.0049
	1250.000 49.2126	**1600.000** 62.9921	**+0.000** +0.0000	**-0.160** -0.0063

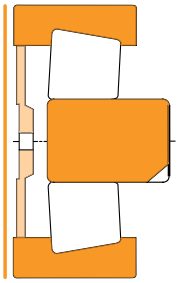

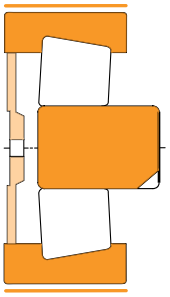

Width tolerances

Please contact your Timken engineer for information on the metric thrust bearing width tolerances.

BEARING FITTING GUIDELINES

INTRODUCTION

Mounting a bearing with the proper fit helps ensure the bearing will function as desired.

The choice of fitting practices will mainly depend upon the following parameters:

- Type of application.
- Precision class of the bearing.
- Rotating or stationary ring.
- Type of layout (single- or multi-row bearings).
- Type and direction of load (continuous/alternate rotating).
- Particular running conditions like shocks, vibrations, over-loading and high speed.
- Capability for machining the seats (grinding, turning or boring).
- Shaft and housing section and material.
- Mounting and setting conditions.

Fig. 25 is a graphical representation of roller bearing shaft and housing fit selection that conforms to accepted industry standards and practices. The bars designated g6, H7, etc., represent shaft/housing diameter and tolerance ranges to achieve various loose and interference fits required for various load ring rotation conditions and mounting types.

As a general guideline, for industrial equipment, bearing rings mounted on a rotating member should have a tight fit. For continuous casting equipment, intermediate tight to loose fits are suggested for inner ring. Roll neck equipment requires, in general, a loose fit mounting for the cylindrical bore of inner rings of tapered roller bearings. Cylindrical roller bearing inner rings can be mounted in either tight or loose fit, depending on rolling products (flat or long) and mounting equipment. See fitting guidelines starting on page 35.

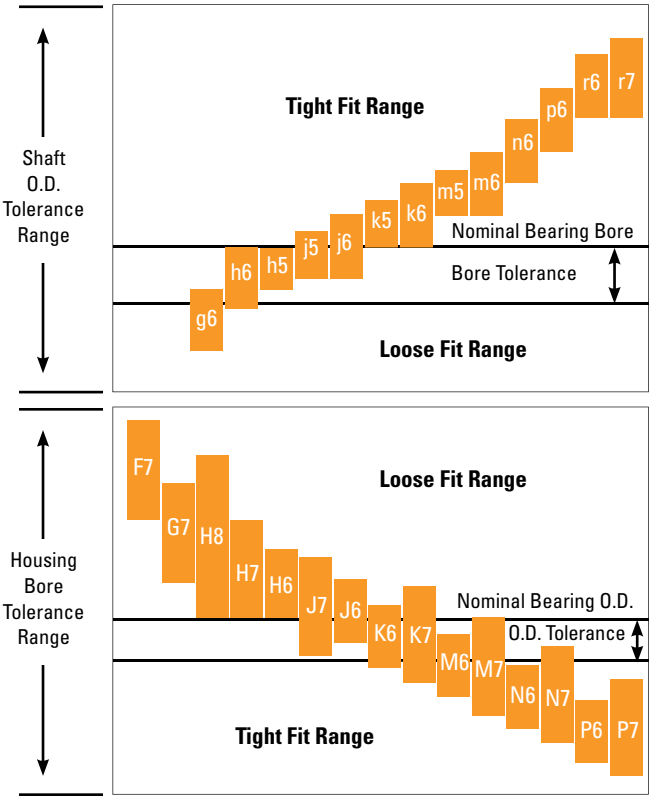

Fig. 25. Shaft and housing fit selection.

SPHERICAL, NEEDLE AND ADAPT™ ROLLER BEARINGS

SPHERICAL, NEEDLE AND ADAPT ROLLER BEARING – INNER RING FITTING PRACTICES FOR CONTINUOUS CASTER EQUIPMENT

TABLE 28. SPHERICAL, NEEDLE AND ADAPT ROLLER BEARINGS – INNER RING FITTING PRACTICES – CONTINUOUS CASTER EQUIPMENT

Bearing Types	Bearing Bore Diameter Nominal (Max.) Over	Incl.	Tolerance	g6 Shaft Diameter Max.	Min.	Fit
	mm in.	**mm** in.	**mm** in.	**mm** in.	**mm** in.	**mm** in.
Spherical Roller Bearing Needle Roller Bearing ADAPT	**18.000** 0.7087	**30.000** 1.1811	**+0.000** **-0.010** +0.0000 -0.0004	**-0.007** -0.0003	**-0.020** -0.0008	**0.020L** **0.003T** 0.0008L 0.0001T
	30.000 1.1811	**50.000** 1.9685	**+0.000** **-0.014** +0.0000 -0.0006	**-0.009** -0.0004	**-0.025** -0.0010	**0.025L** **0.003T** 0.0010L 0.0001T
	50.000 1.9685	**80.000** 3.1496	**+0.000** **-0.015** +0.0000 -0.0006	**-0.010** -0.0004	**-0.029** -0.0011	**0.029L** **0.005T** 0.0011L 0.0002T
	80.000 3.1496	**120.000** 4.7244	**+0.000** **-0.020** +0.0000 -0.0008	**-0.012** -0.0005	**-0.034** -0.0013	**0.034L** **0.008T** 0.0013L 0.0003T
	120.000 4.7244	**180.000** 7.0866	**+0.000** **-0.025** +0.0000 -0.0010	**-0.014** -0.0006	**-0.039** -0.0015	**0.039L** **0.011T** 0.0015L 0.0004T
	180.000 7.0866	**200.000** 7.8740	**+0.000** **-0.030** +0.0000 -0.0012	**-0.015** -0.0006	**-0.044** -0.0017	**0.044L** **0.015T** 0.0017L 0.0006T
	200.000 7.8740	**225.000** 8.8583	**+0.000** **-0.030** +0.0000 -0.0012	**-0.015** -0.0006	**-0.044** -0.0017	**0.044L** **0.015T** 0.0017L 0.0006T

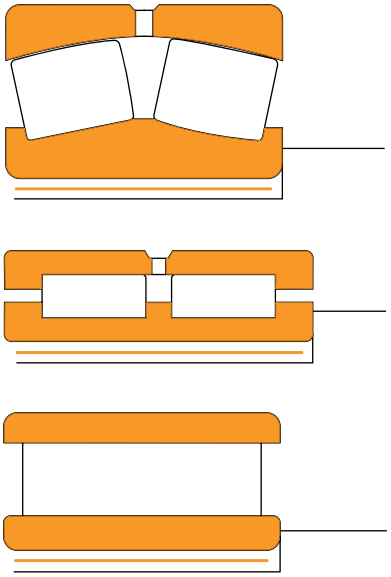

NOTE: Applied for solid-steel shaft.
NOTE: T = Tight, L = Loose

SPHERICAL, NEEDLE AND ADAPT ROLLER BEARING – OUTER RING FITTING PRACTICES FOR CONTINUOUS CASTER EQUIPMENT

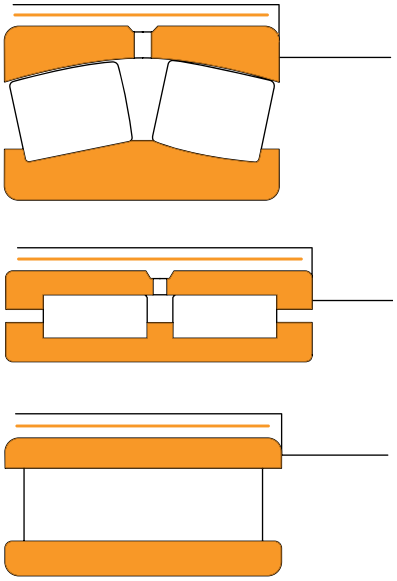

TABLE 29. SPHERICAL, NEEDLE AND ADAPT ROLLER BEARINGS – OUTER RING FITTING PRACTICE – CONTINUOUS CASTER EQUIPMENT

Bearing Types	Bearing Outside Diameter Nominal (Max.) Over	Incl.	Tolerance	G6 Housing Bore Max.	Min.	Fit	H7 Housing Bore Max.	Min.	Fit
	mm in.	**mm** in.	**mm** in.	**mm** in.	**mm** in.	**mm** in.	**mm** in.	**mm** in.	**mm** in.
Spherical Roller Bearing Needle Roller Bearing ADAPT	**30.000** 1.1811	**50.000** 1.9685	**+0.000** **-0.011** +0.0000 -0.0004	**+0.025** +0.0010	**+0.009** +0.0004	**0.009L** **0.036L** 0.0004L 0.0014L	**+0.025** +0.0010	**+0.000** +0.0000	**0.000L** **0.036L** 0.0000L 0.00145L
	50.000 1.9685	**80.000** 3.1496	**+0.000** **-0.013** +0.0000 -0.0005	**+0.029** +0.0011	**+0.010** +0.0004	**0.010L** **0.042L** 0.0004L 0.0017L	**+0.030** +0.0012	**+0.000** +0.0000	**0.000L** **0.043L** 0.0000L 0.0017L
	80.000 3.1496	**120.000** 4.7244	**+0.000** **-0.015** +0.0000 -0.0006	**+0.034** +0.0013	**+0.012** +0.0005	**0.012L** **0.049L** 0.0005L 0.0019L	**+0.035** +0.0014	**+0.000** +0.0000	**0.000L** **0.050L** 0.0000L 0.0020L
	120.000 4.7244	**150.000** 5.9055	**+0.000** **-0.018** +0.0000 -0.0007	**+0.039** +0.0015	**+0.014** +0.0006	**0.014L** **0.057L** 0.0006L 0.0022L	**+0.040** +0.0016	**+0.000** +0.0000	**0.000L** **0.058L** 0.0000L 0.0023L
	150.000 5.9055	**180.000** 7.0866	**+0.000** **-0.025** +0.0000 -0.0010	**+0.039** +0.0015	**+0.014** +0.0006	**0.014L** **0.064L** 0.0006L 0.0025L	**+0.040** +0.0016	**+0.000** +0.0000	**0.000L** **0.065L** 0.0000L 0.0026L
	180.000 7.0866	**250.000** 9.8425	**+0.000** **-0.030** +0.0000 -0.0012	**+0.044** +0.0017	**+0.015** +0.0006	**0.015L** **0.074L** 0.0006L 0.0029L	**+0.046** +0.0018	**+0.000** +0.0000	**0.000L** **0.076L** 0.0000L 0.0030L
	250.000 9.8425	**315.000** 12.4016	**+0.000** **-0.035** +0.0000 -0.0014	**+0.049** +0.0019	**+0.017** +0.0007	**0.017L** **0.084L** 0.0007L 0.0033L	**+0.052** +0.0020	**+0.000** +0.0000	**0.000L** **0.087L** 0.0000L 0.0034L
	315.000 12.4016	**400.000** 15.7480	**+0.000** **-0.040** +0.0000 -0.0016	**+0.054** +0.0021	**+0.018** +0.0007	**0.018L** **0.094L** 0.0007L 0.0037L	**+0.057** +0.0022	**+0.000** +0.0000	**0.000L** **0.097L** 0.0000L 0.0038L
	400.000 15.7480	**500.000** 19.6850	**+0.000** **-0.045** +0.0000 -0.0018	**+0.060** +0.0024	**+0.020** +0.0008	**0.020L** **0.105L** 0.0008L 0.0041L	**+0.063** +0.0025	**+0.000** +0.0000	**0.000L** **0.108L** 0.0000L 0.0043L

NOTE: T = Tight, L = Loose

FOUR-ROW CYLINDRICAL ROLLER BEARINGS

FOUR-ROW CYLINDRICAL ROLLER BEARING – INNER RING FITTING PRACTICES FOR ROLLING MILL EQUIPMENT – TIGHT MOUNTING FLAT AND LONG PRODUCTS

TABLE 30. FOUR-ROW CYLINDRICAL ROLLER BEARING – INNER RING FITTING PRACTICE – ROLLING MILL EQUIPMENT – TIGHT MOUNTING

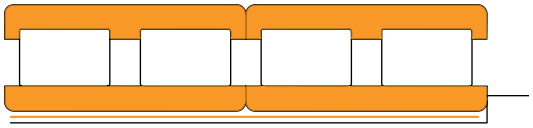

Bearing Types	Bearing Bore Diameter		Tolerance	Inner Ring		
	Over	Incl.		Symbol	Seat Deviation	Resultant Fit
	mm in.	**mm** in.	**mm** in.		**mm** in.	**mm** in.
Four-Row Cylindrical Roller Bearing	**120.000** 4.7244	**180.000** 7.0866	**+0.000** **-0.018** +0.0000 -0.0007	p6	**+0.068** **+0.043** +0.0027 +0.0017	**0.086T** **0.043T** 0.0034T 0.0017T
	180.000 7.0866	**200.000** 7.8740	**+0.000** **-0.022** +0.0000 -0.0009	r6	**+0.106** **+0.077** +0.0042 +0.0030	**0.128T** **0.077T** 0.0050T 0.0030T
	200.000 7.8740	**225.000** 8.8583	**+0.000** **-0.022** +0.0000 -0.0009	r6	**+0.109** **+0.080** +0.0043 +0.0031	**0.131T** **0.080T** 0.0052T 0.0031T
	225.000 8.8583	**250.000** 9.8425	**+0.000** **-0.022** +0.0000 -0.0009	r6	**+0.113** **+0.084** +0.0044 +0.0033	**0.135T** **0.084T** 0.0053T 0.0033T
	250.000 9.8425	**280.000** 11.0236	**+0.000** **-0.025** +0.0000 -0.0010	r6	**+0.126** **+0.094** +0.0050 +0.0037	**0.151T** **0.094T** 0.0059T 0.0037T
	280.000 11.0236	**315.000** 12.4016	**+0.000** **-0.025** +0.0000 -0.0010	r6	**+0.130** **+0.098** +0.0051 +0.0039	**0.155T** **0.098T** 0.0061T 0.0039T
	315.000 12.4016	**355.000** 13.9764	**+0.000** **-0.030** +0.0000 -0.0012	r6	**+0.144** **+0.108** +0.0057 +0.0043	**0.174T** **0.108T** 0.0069T 0.0043T
	355.000 13.9764	**400.000** 15.7480	**+0.000** **-0.030** +0.0000 -0.0012	r6	**+0.150** **+0.114** +0.0059 +0.0045	**0.180T** **0.114T** 0.0071T 0.0045T
	400.000 15.7480	**450.000** 17.7165	**+0.000** **-0.035** +0.0000 -0.0014	s6	**+0.272** **+0.232** +0.0107 +0.0091	**0.307T** **0.232T** 0.0121T 0.0091T
	450.000 17.7165	**500.000** 19.6850	**+0.000** **-0.035** +0.0000 -0.0014	s6	**+0.292** **+0.252** +0.0115 +0.0099	**0.327T** **0.252T** 0.0129T 0.0099T

NOTE: T = Tight

Continued on next page.

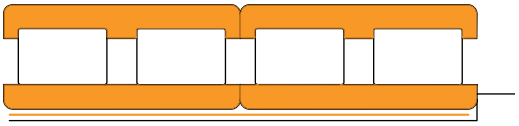

TABLE 31. FOUR-ROW CYLINDRICAL ROLLER BEARING – INNER RING FITTING PRACTICE – ROLLING MILL EQUIPMENT – TIGHT MOUNTING *– continued*

Bearing Types	Bearing Bore Diameter		Tolerance	Inner Ring		
	Over	Incl.		Symbol	Seat Deviation	Resultant Fit
	mm in.	**mm** in.	**mm** in.		**mm** in.	**mm** in.
Four-Row Cylindrical Roller Bearing	**500.000** 19.6850	**560.000** 22.0472	**+0.000** **-0.040** +0.0000 -0.0016	s6	**+0.324** **+0.280** +0.0128 +0.0110	**0.364T** **0.280T** 0.0143T 0.0110T
	560.000 22.0472	**630.000** 24.8031	**+0.000** **-0.040** +0.0000 -0.0016	s6	**+0.354** **+0.310** +0.0139 +0.0122	**0.394T** **0.310T** 0.0155T 0.0122T
	630.000 24.8031	**710.000** 27.9528	**+0.000** **-0.050** +0.0000 -0.0020	s6	**+0.390** **+0.340** +0.0154 +0.0134	**0.440T** **0.340T** 0.0173T 0.0134T
	710.000 27.9528	**800.000** 31.4961	**+0.000** **-0.050** +0.0000 -0.0020	s6	**+0.430** **+0.380** +0.0169 +0.0150	**0.480T** **0.380T** 0.0189T 0.0150T
	800.000 31.4961	**900.000** 35.4331	**+0.000** **-0.065** +0.0000 -0.0026	s6	**+0.486** **+0.430** +0.0191 +0.0169	**0.551T** **0.430T** 0.0217T 0.0169T
	900.000 35.4331	**1000.000** 39.3701	**+0.000** **-0.065** +0.0000 -0.0026	s6	**+0.526** **+0.470** +0.0207 +0.0185	**0.591T** **0.470T** 0.0233T 0.0185T
	1000.000 39.3701	**1120.000** 44.0945	**+0.000** **-0.080** +0.0000 -0.0031	s6	**+0.586** **+0.520** +0.0231 +0.0205	**0.666T** **0.520T** 0.0262T 0.0205T
	1120.000 44.0945	**1250.000** 49.2126	**+0.000** **-0.080** +0.0000 -0.0031	s6	**+0.646** **+0.580** +0.0254 +0.0228	**0.726T** **0.580T** 0.0286T 0.0228T
	1250.000 49.2126	**1400.000** 55.1181	**+0.000** **-0.100** +0.0000 -0.0039	s6	**+0.718** **+0.640** +0.0283 +0.0252	**0.818T** **0.640T** 0.0322T 0.0252T

NOTE: T = Tight

FOUR-ROW CYLINDRICAL ROLLER BEARING – INNER RING FITTING PRACTICES FOR ROLLING MILL EQUIPMENT – LOOSE MOUNTING LONG PRODUCTS

TABLE 32. FOUR-ROW CYLINDRICAL ROLLER BEARING – INNER RING FITTING PRACTICE – ROLLING MILL EQUIPMENT – LOOSE MOUNTING

Bearing Types	Bearing Bore Diameter		Tolerance	Inner Ring		
	Over	Incl.		Symbol	Seat Deviation	Resultant Fit
	mm in.	**mm** in.	**mm** in.		**mm** in.	**mm** in.
	120.000 4.7244	**180.000** 7.0866	**+0.000** **-0.018** +0.0000 -0.0007	d6	**-0.145** **-0.170** -0.0057 -0.0067	**0.127L** **0.170L** 0.0050L 0.0067L
	180.000 7.0866	**250.000** 9.8425	**+0.000** **-0.022** +0.0000 -0.0009	d6	**-0.170** **-0.199** -0.0067 -0.0078	**0.148L** **0.199L** 0.0058L 0.0078L
	250.000 9.8425	**315.000** 12.4016	**+0.000** **-0.025** +0.0000 -0.0010	d6	**-0.190** **-0.222** -0.0075 -0.0087	**0.165L** **0.222L** 0.0065L 0.0087L
	315.000 12.4016	**400.000** 15.7480	**+0.000** **-0.030** +0.0000 -0.0012	d6	**-0.210** **-0.246** -0.0083 -0.0097	**0.180L** **0.246L** 0.0071L 0.0097L
	400.000 15.7480	**500.000** 19.6850	**+0.000** **-0.035** +0.0000 -0.0014	d6	**-0.230** **-0.270** -0.0091 -0.0106	**0.195L** **0.270L** 0.0077L 0.0106L
	500.000 19.6850	**630.000** 24.8031	**+0.000** **-0.040** +0.0000 -0.0016	d6	**-0.260** **-0.304** -0.0102 -0.0120	**0.220L** **0.304L** 0.0087L 0.0120L

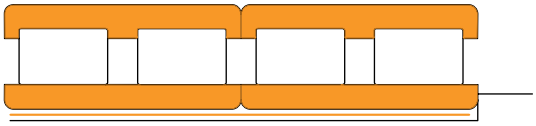

NOTE: For solid-steel shaft.
NOTE: L = Loose

FOUR-ROW CYLINDRICAL ROLLER BEARING – OUTER RING FITTING PRACTICES FOR ROLLING MILL EQUIPMENT

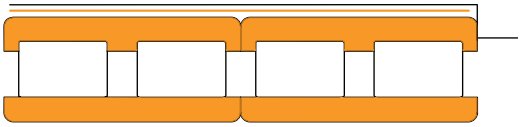

TABLE 33. FOUR-ROW CYLINDRICAL ROLLER BEARING – OUTER RING FITTING PRACTICE – ROLLING MILL EQUIPMENT

Bearing Types	Bearing Outside Diameter		Tolerance	Outer Ring		
	Over	Incl.		Symbol	Seat Deviation	Resultant Fit
	mm in.	**mm** in.	**mm** in.		**mm** in.	**mm** in.
Four-Row Cylindrical Roller Bearing	**180.000** 7.0866	**250.000** 9.8425	**+0.000** **-0.020** +0.0000 -0.0008	F7	**+0.096** **+0.050** +0.0038 +0.0020	**0.116L** **0.050L** 0.0046L 0.0020L
	250.000 9.8425	**315.000** 12.4015	**+0.000** **-0.025** +0.0000 -0.0010	F7	**+0.108** **+0.056** +0.0043 +0.0022	**0.133L** **0.056L** 0.0052L 0.0022L
	315.000 12.4015	**400.000** 15.7480	**+0.000** **-0.028** +0.0000 -0.0011	F7	**0.119** **+0.062** +0.0047 +0.0024	**0.147L** **0.062L** 0.0058L 0.0024L
	400.000 15.7480	**500.000** 19.6850	**+0.000** **-0.033** +0.0000 -0.0013	F7	**+0.131** **+0.068** +0.0052 +0.0027	**0.164L** **0.068L** 0.0065L 0.0027L
	500.000 19.6850	**630.000** 24.8031	**+0.000** **-0.038** +0.0000 -0.0015	F7	**+0.146** **+0.076** +0.0057 +0.0030	**0.184L** **0.076L** 0.0072L 0.0030L
	630.000 24.8031	**800.000** 31.4960	**+0.000** **-0.045** +0.0000 -0.0018	F7	**+0.160** **+0.080** +0.0063 +0.0031	**0.205L** **0.080L** 0.0081L 0.0031L
	800.000 31.4960	**1000.000** 39.3700	**+0.000** **-0.060** +0.0000 -0.0024	F7	**+0.176** **+0.086** +0.0069 +0.0034	**0.236L** **0.086L** 0.0093L 0.0034L
	1000.000 39.3750	**1250.000** 49.2125	**+0.000** **-0.080** +0.0000 -0.0031	F7	**+0.203** **+0.098** +0.0080 +0.0039	**0.283L** **0.098L** 0.0111L 0.0039L
	1250.000 49.2125	**1600.000** 62.9921	**+0.000** **-0.100** +0.0000 -0.0039	F7	**+0.235** **+0.110** +0.0093 +0.0043	**0.335L** **0.110L** 0.0132L 0.0043L

TAPERED ROLLER BEARINGS

TAPERED ROLLER BEARING FITTING PRACTICE – ROLLING MILL – ROLL NECK APPLICATIONS, INCH BEARINGS – CONE

TABLE 34. TAPERED ROLLER BEARING CONE FITTING PRACTICE – ROLL NECK APPLICATIONS, INCH BEARINGS – CLASSES 4 AND 2

Bearing Types	Bearing Bore Diameter		Tolerance		Cone Seat Deviation	Resultant Fit
	Over	Incl.	Class 4	Class 2		
	mm in.	**mm** in.	**mm** in.	**mm** in.	**mm** in.	**mm** in.
TQOW 2TDIW SRNB TDIK TTDK TTDFLK TTDW	**0.000** 0.0000	**76.200** 3.0000	**+0.000** **+0.013** +0.0000 +0.0005	**+0.000** **+0.013** +0.0000 +0.0005	**-0.051** **-0.076** -0.0020 -0.0030	**0.051L** **0.089L** 0.0020L 0.0035L
	76.200 3.0000	**101.600** 4.0000	**+0.000** **+0.025** +0.0000 +0.0010	**+0.000** **+0.025** +0.0000 +0.0010	**-0.076** **-0.102** -0.0030 -0.0040	**0.076L** **0.127L** 0.0030L 0.0050L
	101.600 4.0000	**127.000** 5.0000	**+0.000** **+0.025** +0.0000 +0.0010	**+0.000** **+0.025** +0.0000 +0.0010	**-0.102** **-0.127** -0.0040 -0.0050	**0.102L** **0.152L** 0.0040L 0.0060L
	127.000 5.0000	**152.400** 6.0000	**+0.000** **+0.025** +0.0000 +0.0010	**+0.000** **+0.025** +0.0000 +0.0010	**-0.127** **-0.152** -0.0050 -0.0060	**0.127L** **0.177L** 0.0050L 0.0070L
	152.400 6.0000	**203.200** 8.0000	**+0.000** **+0.025** +0.0000 +0.0010	**+0.000** **+0.025** +0.0000 +0.0010	**-0.152** **-0.178** -0.0060 -0.0070	**0.152L** **0.203L** 0.0060L 0.0080L
	203.200 8.0000	**304.800** 12.0000	**+0.000** **+0.025** +0.0000 +0.0010	**+0.000** **+0.025** +0.0000 +0.0010	**-0.0178** **-0.0203** -0.0070 -0.0080	**0.0178L** **0.0228L** 0.0070L 0.0090L
	304.800 12.0000	**609.600** 24.0000	–	**+0.000** **+0.051** +0.0000 +0.0020	**-0.203** **-0.254** -0.0080 -0.0100	**0.203L** **0.305L** 0.0080L 0.0120L
	609.600 24.0000	**914.400** 36.0000	**+0.000** **+0.076** +0.0000 +0.0030	–	**-0.254** **-0.330** -0.0100 -0.0130	**0.254L** **0.406L** 0.0100L 0.0160L
	914.400 36.0000	**1219.200** 48.0000	**+0.000** **+0.102** +0.0000 +0.0040	–	**-0.305** **-0.406** -0.0120 -0.0160	**0.305L** **0.508L** 0.0120L 0.0200L
	1219.200 48.0000	–	**+0.000** **+0.130** +0.0000 +0.0050	–	**-0.305** **-0.432** -0.0120 -0.0170	**0.305L** **0.559L** 0.0120L 0.0220L

NOTE: Valid for solid-steel shafts
NOTE: L = Loose

Radial Position

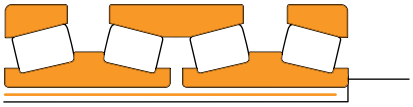

Axial Position

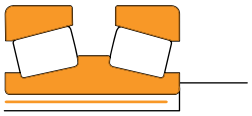

TAPERED ROLLER BEARING FITTING PRACTICE – ROLLING MILL – ROLL NECK APPLICATIONS, INCH BEARINGS – CUP

Radial Position

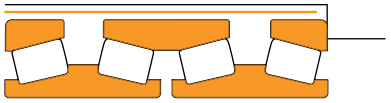

Axial Position

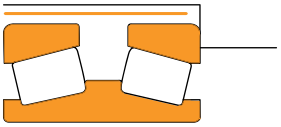

For TDIK, TTDK, and TTDFLK bearings axial (thrust) positions a larger clearance is required between the bearing outer diameter and the housing (chock) to avoid radial loading of the bearing. As as result, the fit shown in table should be increased to give a clearance range of 2 to 3 mm (0.080 in. to 0.120 in.).

TABLE 35. TAPERED ROLLER BEARING CUP FITTING PRACTICE – ROLL NECK APPLICATIONS – INCH BEARINGS – CLASSES 4 AND 2

Bearing Types	Bearing Outside Diameter		Tolerance		Cup Seat Deviation	Resultant Fit
	Over	Incl.	Class 4	Class 2		
	mm in.	**mm** in.	**mm** in.	**mm** in.	**mm** in.	**mm** in.
TQOW 2TDIW SRNB TDIK TTDK TTDFLK TTDW	**0.000** 0.0000	**304.800** 12.0000	**+0.000** **+0.025** +0.0000 +0.0010	**+0.000** **+0.025** +0.0000 +0.0010	**+0.051** **+0.076** +0.0020 +0.0030	**0.026L** **0.076L** 0.0010L 0.0030L
	304.800 12.0000	**609.600** 24.0000	**+0.000** **+0.051** +0.0000 +0.0020	**+0.000** **+0.051** +0.0000 +0.0020	**+0.102** **+0.152** +0.0040 +0.0060	**0.051L** **0.152L** 0.0020L 0.0060L
	609.600 24.0000	**914.400** 36.0000	**+0.000** **+0.076** +0.0000 +0.0030	**+0.000** **+0.076** +0.0000 +0.0030	**+0.152** **+0.229** +0.0060 +0.0090	**0.076L** **0.229L** 0.0030L 0.0090L
	914.400 36.0000	**1219.200** 48.0000	**+0.000** **+0.102** +0.0000 +0.0040	–	**+0.203** **+0.305** +0.0080 +0.0120	**0.102L** **0.305L** 0.0040L 0.0120L
	1219.200 48.0000	**1524.000** 60.0000	**+0.000** **+0.127** +0.0000 +0.0050	–	**+0.254** **+0.381** +0.0100 +0.0150	**0.127L** **0.381L** 0.0050L 0.0150L
	1524.000 60.0000	–	**+0.000** **+0.127** +0.0000 +0.0050	–	**+0.305** **+0.432** +0.0120 +0.0170	**0.178L** **0.432L** 0.0070L 0.0170L

NOTE: L = Loose

TAPERED ROLLER BEARING FITTING PRACTICE – ROLLING MILL – ROLL NECK APPLICATIONS, METRIC BEARINGS – CONE

TABLE 36. TAPERED ROLLER BEARING CONE FITTING PRACTICE – ROLL NECK APPLICATIONS – METRIC BEARINGS – CLASSES K AND N

Bearing Types	Bearing Bore Diameter		Tolerance		Symbol	Cone Seat Deviation	Resultant Fit
	Over	Incl.	Class K	Class N			
	mm in.	**mm** in.	**mm** in.	**mm** in.		**mm** in.	**mm** in.
TQOW 2TDIW SRNB TDIK TTDK TTDFLK TTDW	**120.000** 4.7244	**180.000** 7.0866	**+0.000** **-0.025** +0.0000 -0.0010	**+0.000** **-0.025** +0.0000 -0.0010	d7	**-0.145** **-0.185** 0.0057 -0.0072	**0.120L** **0.185L** 0.0047L 0.0072L
	180.000 7.0866	**250.000** 9.8425	**+0.000** **-0.030** +0.0000 -0.0012	**+0.000** **-0.030** +0.0000 -0.0012	d7	**-0.170** **-0.216** -0.0067 -0.0085	**0.140L** **0.216L** 0.0055L 0.0085L
	250.000 9.8425	**315.000** 12.4016	**+0.000** **-0.035** +0.0000 -0.0014	**+0.000** **-0.035** +0.0000 -0.0014	d7	**-0.190** **-0.242** -0.0075 -0.0095	**0.155L** **0.242L** 0.0061L 0.0095L
	315.000 12.4016	**400.000** 15.7480	**+0.000** **-0.040** +0.0000 -0.0016	**+0.000** **-0.040** +0.0000 -0.0016	d7	**-0.210** **-0.267** -0.0083 -0.0105	**0.170L** **0.267L** 0.0067L 0.0105L
	400.000 15.7480	**500.000** 19.6850	**+0.000** **-0.045** +0.0000 -0.0017	**+0.000** **-0.045** +0.0000 -0.0017	d7	**-0.230** **-0.293** -0.0091 -0.0115	**0.185L** **0.293L** 0.0073L 0.0115L
	500.000 19.6850	**630.000** 24.8031	**+0.000** **-0.050** +0.0000 -0.0020	–	d7	**-0.260** **-0.330** -0.0102 -0.0130	**0.210L** **0.330L** 0.0083L 0.0130L
	630.000 24.8031	**800.000** 31.4961	**+0.000** **-0.080** +0.0000 -0.0031	–	–	**-0.320** **-0.400** -0.0126 -0.0157	**0.240L** **0.400L** 0.0094L 0.0157L
	800.000 31.4961	**1000.000** 39.3701	**+0.000** **-0.100** +0.0000 -0.0039	–	–	**-0.360** **-0.450** -0.0142 -0.0177	**0.260L** **0.450L** 0.0102L 0.0177L
	1000.000 39.3701	**1200.000** 47.2441	**+0.000** **-0.130** +0.0000 -0.0051	–	–	**-0.425** **-0.530** -0.0167 -0.0209	**0.295L** **0.530L** 0.0116L 0.0209L
	1200.000 47.2441	**1250.000** 49.2126	**+0.000** **-0.150** +0.0000 -0.0059	–	–	**-0.425** **-0.530** -0.0167 -0.0209	**0.275L** **0.530L** 0.0108L 0.0209L
	1250.000 49.2126	**1600.000** 62.9921	**+0.000** **-0.150** +0.0000 -0.0059	–	–	**-0.475** **-0.600** -0.0187 -0.0236	**0.325L** **0.600L** 0.0128L 0.0236L

NOTE: Valid for solid-steel shafts
NOTE: L = Loose

Radial Position

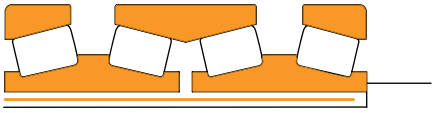

Axial Position

TAPERED ROLLER BEARING FITTING PRACTICE – ROLLING MILL – ROLL NECK APPLICATIONS, METRIC BEARINGS – CUP

Radial Position

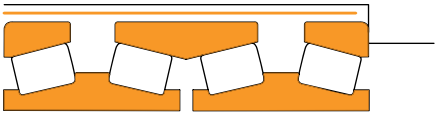

Axial Position

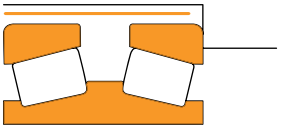

For TDIK, TTDK, and TTDFLK bearings axial (thrust) positions a larger clearance is required between the bearing outer diameter and the housing (chock) to avoid radial loading of the bearing. As as result, the fit shown in table should be increased to give a clearance range of 2 to 3 mm (0.080 in. to 0.120 in.).

TABLE 37. TAPERED ROLLER BEARING CUP FITTING PRACTICE – ROLL NECK APPLICATIONS – METRIC BEARINGS – CLASSES K AND N

Bearing Types	Bearing Outside Diameter		Tolerance		Symbol	Cup Seat Deviation	Resultant Fit
	Over	Incl.	Class K	Class N			
	mm in.	**mm** in.	**mm** in.	**mm** in.		**mm** in.	**mm** in.
TQOW 2TDIW SRNB TDIK TTDK TTDFLK TTDW	**150.000** 5.9055	**180.000** 7.0866	**+0.000** **-0.025** +0.0000 -0.0010	**+0.000** **-0.025** +0.0000 -0.0010	F6	**+0.068** **+0.043** +0.0027 +0.0017	**0.093L** **0.043L** 0.0037L 0.0017L
	180.000 7.0866	**250.000** 9.8425	**+0.000** **-0.030** +0.0000 -0.0012	**+0.000** **-0.030** +0.0000 -0.0012	F6	**+0.079** **+0.050** +0.0031 +0.0020	**0.109L** **0.050L** 0.0043L 0.0020L
	250.000 9.8425	**315.000** 12.4016	**+0.000** **-0.035** +0.0000 -0.0014	**+0.000** **-0.035** +0.0000 -0.0014	F6	**+0.088** **+0.056** +0.0035 +0.0022	**0.123L** **0.056L** 0.0048L 0.0022L
	315.000 12.4016	**400.000** 15.7480	**+0.000** **-0.040** +0.0000 -0.0016	**+0.000** **-0.040** +0.0000 -0.0016	F7	**+0.119** **+0.062** +0.0047 +0.0024	**0.159L** **0.062L** 0.0063L 0.0024L
	400.000 15.7480	**500.000** 19.6850	**+0.000** **-0.045** +0.0000 -0.0018	**+0.000** **-0.045** +0.0000 -0.0018	F7	**+0.131** **+0.068** +0.0052 +0.0027	**0.176L** **0.068L** 0.0069L 0.0027L
	500.000 19.6850	**630.000** 24.8031	**+0.000** **-0.050** +0.0000 -0.0020	**+0.000** **-0.050** +0.0000 -0.0020	F7	**+0.146** **+0.076** +0.0057 +0.0030	**0.196L** **0.076L** 0.0077L 0.0030L
	630.000 24.8031	**800.000** 31.4961	**+0.000** **-0.080** +0.0000 -0.0031	–	F7	**+0.160** **+0.080** +0.0063 +0.0031	**0.240L** **0.080L** 0.0094L 0.0031L
	800.000 31.4961	**1000.000** 39.3701	**+0.000** **-0.100** +0.0000 -0.0039	–	F7	**+0.176** **+0.086** +0.0069 +0.0034	**0.276L** **0.086L** 0.0109L 0.0034L
	1000.000 39.3701	**1200.000** 47.2441	**+0.000** **-0.130** +0.0000 -0.0050	–	F7	**+0.203** **+0.098** +0.0080 +0.0039	**0.333L** **0.098L** 0.0131L 0.0039L
	1200.000 47.2441	**1250.000** 49.2126	**+0.000** **-0.165** +0.0000 -0.0065	–	F7	**+0.203** **+0.098** +0.0080 +0.0039	**0.368L** **0.098L** 0.0145L 0.0039L
	1250.000 49.2126	**1600.000** 62.9921	**+0.000** **-0.165** +0.0000 -0.0065	–	F7	**+0.235** **+0.110** +0.0093 +0.0043	**0.400L** **0.110L** 0.0157L 0.0043L
	1600.000 62.9921	**2000.000** 78.7402	**+0.000** **-0.200** +0.0000 -0.0079	–	F7	**+0.270** **+0.120** +0.0106 +0.0047	**0.470L** **0.120L** 0.0185L 0.0047L

NOTE: L = Loose

BEARING RADIAL INTERNAL CLEARANCES
SPHERICAL ROLLER BEARINGS – CYLINDRICAL BORE

TABLE 38. RADIAL INTERNAL CLEARANCE LIMITS – SPHERICAL ROLLER BEARINGS – CYLINDRICAL BORE

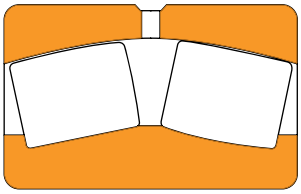

Bearing Types	Bore		Radial Internal Clearance					
			C0		C3		C4	
	Over	Incl.	Min.	Max.	Min.	Max.	Min.	Max.
	mm in.	**mm** in.	**mm** in.	**mm** in.	**mm** in.	**mm** in.	**mm** in.	**mm** in.
Spherical Roller Bearing	**24.000** 0.9449	**30.000** 1.1811	**0.025** 0.0010	**0.040** 0.0016	**0.040** 0.0016	**0.055** 0.0022	**0.055** 0.0022	**0.075** 0.0030
	30.000 1.1811	**40.000** 1.5748	**0.030** 0.0012	**0.045** 0.0018	**0.045** 0.0018	**0.060** 0.0024	**0.060** 0.0024	**0.080** 0.0031
	40.000 1.5748	**50.000** 1.9685	**0.035** 0.0014	**0.055** 0.0022	**0.055** 0.0022	**0.075** 0.0030	**0.075** 0.0030	**0.100** 0.0039
	50.000 1.9685	**60.000** 2.3622	**0.040** 0.0016	**0.065** 0.0026	**0.065** 0.0026	**0.090** 0.0035	**0.090** 0.0035	**0.120** 0.0047
	65.000 2.5591	**80.000** 3.1496	**0.050** 0.0020	**0.080** 0.0031	**0.080** 0.0031	**0.110** 0.0043	**0.110** 0.0043	**0.145** 0.0057
	80.000 3.1496	**100.000** 3.9370	**0.060** 0.0024	**0.100** 0.0039	**0.100** 0.0039	**0.135** 0.0053	**0.135** 0.0053	**0.180** 0.0071
	100.000 3.9370	**120.000** 4.7244	**0.075** 0.0030	**0.120** 0.0047	**0.120** 0.0047	**0.160** 0.0063	**0.160** 0.0063	**0.210** 0.0083
	120.000 4.7244	**140.000** 5.5118	**0.095** 0.0037	**0.145** 0.0057	**0.145** 0.0057	**0.190** 0.0075	**0.190** 0.0075	**0.240** 0.0094
	140.000 5.5118	**160.000** 6.2992	**0.110** 0.0043	**0.170** 0.0067	**0.170** 0.0067	**0.220** 0.0087	**0.220** 0.0087	**0.280** 0.0110
	160.000 6.2992	**180.000** 7.0866	**0.120** 0.0047	**0.180** 0.0071	**0.180** 0.0071	**0.240** 0.0094	**0.240** 0.0094	**0.310** 0.0122
	180.000 7.0866	**200.000** 7.8740	**0.130** 0.0051	**0.200** 0.0079	**0.200** 0.0079	**0.260** 0.0102	**0.260** 0.0102	**0.340** 0.0134

NOTE: For other sizes, refer to the Timken® Spherical Roller Bearing Catalog (order no. 10446).

NEEDLE ROLLER BEARINGS – CYLINDRICAL BORE

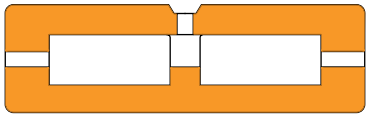

TABLE 39. RADIAL INTERNAL CLEARANCE LIMITS – NEEDLE ROLLER BEARINGS – CYLINDRICAL BORE

Bearing Types	Bore		Cylindrical Bore C4	
	Over	Incl.	Min.	Max.
	mm in.	**mm** in.	**mm** in.	**mm** in.
Needle Roller Bearing	**24.000** 0.9449	**30.000** 1.1811	**0.055** 0.0022	**0.075** 0.0030
	30.000 1.1811	**40.000** 1.5748	**0.060** 0.0024	**0.080** 0.0031
	40.000 1.5748	**50.000** 1.9685	**0.075** 0.0030	**0.100** 0.0039
	50.000 1.9685	**60.000** 2.3622	**0.090** 0.0035	**0.120** 0.0047
	65.000 2.5591	**80.000** 3.1496	**0.110** 0.0043	**0.145** 0.0057
	80.000 3.1496	**100.000** 3.9370	**0.135** 0.0053	**0.180** 0.0071
	100.000 3.9370	**120.000** 4.7244	**0.160** 0.0063	**0.210** 0.0083
	120.000 4.7244	**140.000** 5.5118	**0.190** 0.0075	**0.240** 0.0094
	140.000 5.5118	**160.000** 6.2992	**0.220** 0.0087	**0.280** 0.0110
	160.000 6.2992	**180.000** 7.0866	**0.240** 0.0094	**0.310** 0.0122
	180.000 7.0866	**200.000** 7.8740	**0.260** 0.0102	**0.340** 0.0134

CYLINDRICAL ROLLER BEARINGS – CYLINDRICAL BORE

TABLE 40. RADIAL INTERNAL CLEARANCE LIMITS – CYLINDRICAL ROLLER BEARINGS – CYLINDRICAL BORE

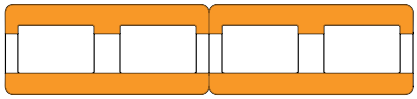

Bearing Types	Bore		Cylindrical Bore					
			C0		C3		C4	
	Over	Incl.	Min.	Max.	Min.	Max.	Min.	Max.
	mm in.	mm in.	mm in.	mm in.	mm in.	mm in.	mm in.	mm in.
Cylindrical Roller Bearing	**50.000** 1.9685	**65.000** 2.5591	**0.040** 0.0016	**0.070** 0.0028	**0.060** 0.0024	**0.090** 0.0035	**0.080** 0.0031	**0.110** 0.0043
	65.000 2.5591	**80.000** 3.1496	**0.040** 0.0016	**0.075** 0.0030	**0.065** 0.0026	**0.100** 0.0039	**0.090** 0.0035	**0.125** 0.0049
	80.000 3.1496	**100.000** 3.9370	**0.050** 0.0020	**0.085** 0.0033	**0.075** 0.0030	**0.110** 0.0043	**0.105** 0.0041	**0.140** 0.0055
	100.000 3.937	**120.000** 4.7244	**0.050** 0.0020	**0.090** 0.0035	**0.085** 0.0033	**0.125** 0.0049	**0.125** 0.0049	**0.165** 0.0065
	120.000 4.7244	**140.000** 5.5118	**0.060** 0.0024	**0.105** 0.0041	**0.100** 0.0039	**0.145** 0.0057	**0.145** 0.0057	**0.190** 0.0075
	140.000 5.5118	**160.000** 6.2992	**0.070** 0.0028	**0.120** 0.0047	**0.115** 0.0045	**0.165** 0.0065	**0.165** 0.0065	**0.215** 0.0085
	160.000 6.2992	**180.000** 7.0866	**0.075** 0.0030	**0.125** 0.0049	**0.120** 0.0047	**0.170** 0.0067	**0.170** 0.0067	**0.220** 0.0087
	180.000 7.0866	**200.000** 7.8740	**0.090** 0.0035	**0.145** 0.0057	**0.140** 0.0055	**0.195** 0.0077	**0.195** 0.0077	**0.250** 0.0098
	200.000 7.874	**225.000** 8.8583	**0.105** 0.0041	**0.165** 0.0065	**0.160** 0.0063	**0.220** 0.0087	**0.220** 0.0087	**0.280** 0.0110
	225.000 8.8583	**250.000** 9.8425	**0.110** 0.0043	**0.175** 0.0069	**0.170** 0.0067	**0.235** 0.0093	**0.235** 0.0093	**0.300** 0.0118
	250.000 9.8425	**280.000** 11.0236	**0.125** 0.0049	**0.195** 0.0077	**0.190** 0.0075	**0.260** 0.0102	**0.260** 0.0102	**0.330** 0.0130
	280.000 11.0236	**315.000** 12.4016	**0.130** 0.0051	**0.205** 0.0081	**0.200** 0.0079	**0.275** 0.0108	**0.275** 0.0108	**0.350** 0.0138
	315.000 12.4016	**355.000** 13.9764	**0.145** 0.0057	**0.225** 0.0089	**0.225** 0.0089	**0.305** 0.0120	**0.305** 0.0120	**0.385** 0.0152
	355.000 13.9764	**400.000** 15.7480	**0.190** 0.0075	**0.280** 0.0110	**0.280** 0.0110	**0.370** 0.0146	**0.370** 0.0146	**0.460** 0.0181
	400.000 15.748	**450.000** 17.7165	**0.210** 0.0083	**0.310** 0.0122	**0.310** 0.0122	**0.410** 0.0161	**0.410** 0.0161	**0.510** 0.0201
	450.000 17.7165	**500.000** 19.6850	**0.220** 0.0087	**0.330** 0.0130	**0.330** 0.0130	**0.440** 0.0173	**0.440** 0.0173	**0.550** 0.0217
	500.000 19.685	**560.000** 22.0472	**0.240** 0.0095	**0.360** 0.0142	**0.360** 0.0142	**0.480** 0.0189	**0.480** 0.0189	**0.600** 0.0236
	560.000 22.0472	**630.000** 24.8031	**0.260** 0.0102	**0.380** 0.0150	**0.380** 0.0150	**0.500** 0.0197	**0.500** 0.0197	**0.620** 0.0244
	630.000 24.8031	**710.000** 27.9528	**0.285** 0.0112	**0.425** 0.0167	**0.425** 0.0167	**0.565** 0.0222	**0.565** 0.0222	**0.705** 0.0278
	710.000 27.9528	**800.000** 31.4961	**0.310** 0.0122	**0.470** 0.0185	**0.470** 0.0185	**0.630** 0.0248	**0.630** 0.0248	**0.790** 0.0311
	800.000 31.4961	**900.000** 35.4331	**0.350** 0.0138	**0.520** 0.0205	**0.520** 0.0205	**0.690** 0.0272	**0.690** 0.0272	**0.860** 0.0339
	900.000 35.4331	**1000.000** 39.3701	**0.390** 0.0154	**0.580** 0.0228	**0.580** 0.0228	**0.770** 0.0303	**0.770** 0.0303	**0.960** 0.0378
	1000.000 39.3700	**1120.000** 44.0945	**0.430** 0.0169	**0.640** 0.0252	**0.640** 0.0252	**0.850** 0.0335	**0.850** 0.0335	**1.060** 0.0417

ADAPT™ BEARINGS

TABLE 41. RADIAL INTERNAL CLEARANCE LIMITS – ADAPT BEARINGS

Bearing Types	Bore		Cylindrical Bore					
			C0		C3		C4	
	Over	Incl.	Min.	Max.	Min.	Max.	Min.	Max.
	mm in.	**mm** in.	**mm** in.	**mm** in.	**mm** in.	**mm** in.	**mm** in.	**mm** in.
ADAPT	**80.000** 3.1496	**100.000** 3.9370	**0.050** 0.0020	**0.105** 0.0041	**0.075** 0.0030	**0.130** 0.0051	**0.105** 0.0041	**0.160** 0.0063
	100.000 3.9370	**120.000** 4.7244	**0.050** 0.0020	**0.110** 0.0043	**0.085** 0.0033	**0.145** 0.0057	**0.125** 0.0049	**0.185** 0.0073
	120.000 4.7244	**140.000** 5.5118	**0.060** 0.0024	**0.125** 0.0049	**0.100** 0.0039	**0.165** 0.0065	**0.145** 0.0057	**0.210** 0.0083
	140.000 5.5118	**160.000** 6.2992	**0.070** 0.0028	**0.140** 0.0055	**0.115** 0.0045	**0.185** 0.0073	**0.165** 0.0065	**0.235** 0.0093
	160.000 6.2992	**180.000** 7.0866	**0.075** 0.0030	**0.145** 0.0057	**0.120** 0.0047	**0.190** 0.0075	**0.170** 0.0067	**0.240** 0.0094

BEARING DATA

The following topics are covered within this section:

Spherical Roller Bearings. 51
Heavy-Duty Needle Roller Bearings. 59
ADAPT™ Bearings. 63
Four-Row Cylindrical Roller Bearings 67
Tapered Roller Bearings. 87
Four-Row Tapered Roller Bearings. 91
TQOW-2TDIW 91
Sealed Roll Neck Bearings 129
TQITS. 145
Two-Row Tapered Roller Bearings. 155
TNASWH 155
TDIT-TNAT 159
Thrust Tapered Roller Bearings. 173
TDIK. 173
TTDFLK-TTDW-TTDK 187
Solutions for Screwdown Systems 195
Thrust Spherical Roller Bearings 207

SPHERICAL ROLLER BEARINGS
CONTINUOUS CASTER APPLICATION

Used in a wide range of metals applications including continuous caster support rolls, gearboxes, table rolls and auxiliary equipment. Timken® spherical roller bearings provide high-load capacity and advanced geometry that reduces friction and heat generation.

Popular sizes for continuous casters support rolls are listed in the following tables. Please refer to Timken® Spherical Roller Bearing Catalog (order no. 10446) for more information on our complete range of spherical roller bearings available in sizes from 25 mm (0.984 in.) to 1500 mm (59.055 in.) bore.

Fig. 26. Spherical roller bearing.

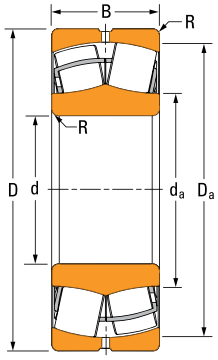

Fig. 27. EJ.

OVERALL DIMENSIONS:

d – Bore diameter

D – Outer diameter

B – Width over inner ring and outer ring

R – Shaft/housing maximum fillet radius

d_a – Shaft shoulder diameter

D_a – Housing shoulder diameter

NOMENCLATURE

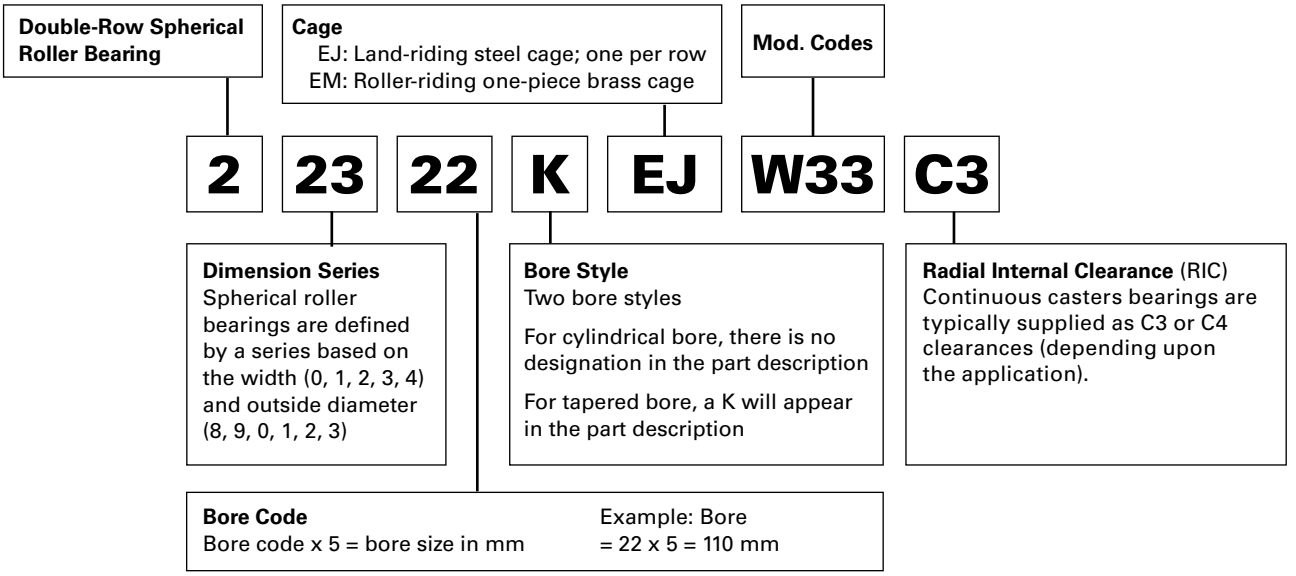

Fig. 28. Spherical roller bearing nomenclature.

All Timken® spherical roller bearings are listed with an EJ steel cage. EM brass cage bearings are available upon request. The W33 feature is supplied as standard, additional modification codes (table 45) are available upon request. Please refer to the Timken® Spherical Roller Bearing Catalog (order no. 10446) for further details.

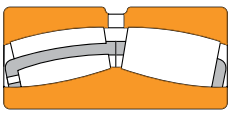

W33

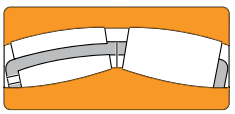

W841

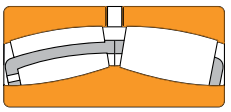

W901

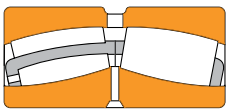

W33W89

TABLE 42. MODIFICATION CODES

Timken	SKF	FAG	Timken General Definition
W20	W20	SY	Outer ring with standard lube holes
W31	W31	–	Bearing inspected to certain quality control requirements
W33	W33	S	Outer ring with standard lube groove and lube holes
W89	W26	H40AA	Inner ring with lube groove and lube holes, lube grooves in faces of retainer
W94	W26	H40A	Inner ring with lube holes, lube grooves in faces of retainer
W841	–	–	Plain outer-ring O.D. (no lube groove or holes) plus W31
W901	–	–	Combines W20 and W841 (caster bearings only)
C1 to C5	C1 to C5	C1 to C5	Radial internal clearance code
K	K	K	Standard tapered bore[1]
[2]	S1	S1	Inner and outer rings stabilized for operation up to 200° C (392° F)
S2	S2	S2	Inner and outer rings stabilized for operation up to 250° C (482° F)
S3	S3	S3	Inner and outer rings stabilized for operation up to 300° C (572° F)
S4	S4	S4	Inner and outer rings stabilized for operation up to 350° C (662° F)

[1]Standard taper for 222, 223, 230, 231, 232 and 239 series is 1:12. Standard taper for 248, 249, 240, 241 and 242 series is 1:30.
[2]Timken standard heat stabilizing treatment is S1.

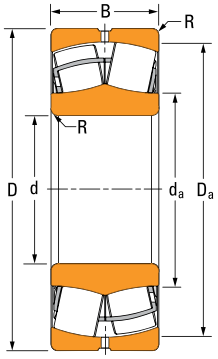

EJ

TABLE 43. SPHERICAL ROLLER BEARING PRODUCT DATA

Bearing Part No.	Bearing Dimensions			Load Ratings		Equivalent Radial Load Factors[1]				Mounting Dimensions			Geometry Factor[3]	Weight
						Dynamic			Static		Backing Diameter			
	Bore	O.D.	Width	Dynamic Radial	Static Radial		$\frac{Fa}{Fr} \le e$	$\frac{Fa}{Fr} \ge e$	In All Cases	Fillet[2] (Max.)	Shaft	Housing		
							X=1	X=0.67	X_0=1					
	d	D	B	C_1	C_o	e	Y	Y	Y_0	R	d_a	D_a	C_g	
	mm in.	**mm** in.	**mm** in.	**kN** lbf	**kN** lbf					**mm** in.	**mm** in.	**mm** in.		**kg** lbs.
22205EJ	**25** 0.9843	**52** 2.0472	**18** 0.7087	**50.6** 11375	**43.1** 9689	0.34	2.00	2.98	1.96	**1.0** 0.04	**30.0** 1.18	**47.0** 1.85	0.032	**0.17** 0.37
22206EJ	**30** 1.1811	**62** 2.4409	**20** 0.7874	**68.6** 15422	**60.8** 13668	0.31	2.15	3.20	2.10	**1.0** 0.04	**38.0** 1.50	**56.0** 2.20	0.037	**0.27** 0.60
22207EJ	**35** 1.3780	**72** 2.8346	**23** 0.9055	**90.5** 20345	**88.0** 19783	0.31	2.21	3.29	2.16	**1.0** 0.04	**45.0** 1.77	**65.0** 2.56	0.041	**0.44** 0.96
22208EJ	**40** 1.5748	**80** 3.1496	**23** 0.9055	**106** 23830	**100** 22413	0.27	2.47	3.67	2.41	**1.0** 0.04	**50.0** 1.97	**73.0** 2.87	0.044	**0.52** 1.15
22209EJ	**45** 1.7717	**85** 3.3465	**23** 0.9055	**109** 24504	**108** 24279	0.26	2.64	3.93	2.58	**1.0** 0.04	**55.0** 2.17	**77.0** 3.03	0.046	**0.57** 1.25
22309EJ	**45** 1.7717	**100** 3.9370	**36** 1.4173	**191** 43000	**182** 40800	0.36	1.90	2.83	1.86	**1.5** 0.06	**58.0** 2.28	**89.7** 3.53	0.049	**1.34** 2.95
22210EJ	**50** 1.9685	**90** 3.5433	**23** 0.9055	**117** 26303	**118** 26527	0.24	2.84	4.23	2.78	**1.0** 0.04	**59.0** 2.32	**82.0** 3.23	0.049	**0.61** 1.34
22211EJ	**55** 2.1654	**100** 3.9370	**25** 0.9843	**140** 31473	**142** 31923	0.23	2.95	4.40	2.89	**1.5** 0.06	**66.0** 2.60	**91.0** 3.58	0.052	**0.82** 1.80
22311EJ	**55** 2.1654	**120** 4.7244	**43** 1.6929	**279** 62800	**284** 63800	0.36	1.89	2.81	1.84	**2** 0.08	**69.4** 2.73	**106.1** 4.18	0.057	**2.34** 5.15
22212EJ	**60** 2.3622	**110** 4.3307	**28** 1.1024	**169** 37993	**174** 39117	0.24	2.84	4.23	2.78	**1.5** 0.06	**72.0** 2.83	**100.0** 3.94	0.055	**1.13** 2.48
22312EJ	**60** 2.3622	**130** 5.1181	**46** 1.8110	**322** 72388	**329** 73962	0.34	1.98	2.94	1.93	**2.0** 0.08	**77.0** 3.03	**117.0** 4.61	0.061	**2.87** 6.30
22213EJ	**65** 2.5591	**120** 4.7244	**31** 1.2205	**206** 46311	**216** 48559	0.24	2.79	4.15	2.73	**1.5** 0.06	**78.0** 3.07	**109.0** 4.29	0.058	**1.51** 3.32
22214EJ	**70** 2.7559	**125** 4.9213	**31** 1.2205	**213** 47884	**231** 51931	0.23	2.90	4.32	2.84	**1.5** 0.06	**84.0** 3.31	**114.0** 4.49	0.063	**1.59** 3.49
24015EJ	**75** 2.9528	**115** 4.5276	**40** 1.5748	**200** 44900	**262** 58900	0.31	2.19	3.26	2.14	**1** 0.04	**83.3** 3.28	**106.0** 4.17	0.061	**1.41** 3.10
22215EJ	**75** 2.9528	**130** 5.1181	**31** 1.2205	**222** 49908	**240** 53954	0.22	3.14	4.67	3.07	**1.5** 0.06	**88.0** 3.46	**120.0** 4.72	0.062	**1.65** 3.63

[1]See Timken Engineering Manual (order no. 10424) for usage instructions.
[2]Maximum shaft or housing fillet radius that bearing corners will clear.
[3]Geometry constant for Lubrication Life Factor a_{3j} is found in the Bearing Ratings section of the Timken Engineering Manual (order no. 10424).

Continued on next page.

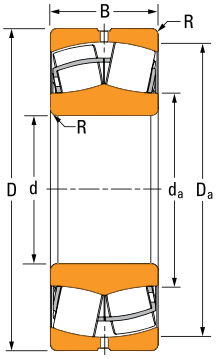

EJ

TABLE 43. SPHERICAL ROLLER BEARING PRODUCT DATA – *continued*

Bearing Part No.	Bearing Dimensions			Load Ratings		Equivalent Radial Load Factors[1]				Mounting Dimensions			Geometry Factor[3]	Weight
						Dynamic			Static		Backing Diameter			
	Bore	O.D.	Width	Dynamic Radial	Static Radial		$\frac{Fa}{Fr} \le e$	$\frac{Fa}{Fr} \ge e$	In All Cases	Fillet[2] (Max.)	Shaft	Housing		
							X=1	X=0.67	X_0=1					
	d	D	B	C_1	C_o	e	Y	Y	Y_0	R	d_a	D_a	C_g	
	mm in.	**mm** in.	**mm** in.	**kN** lbf	**kN** lbf					**mm** in.	**mm** in.	**mm** in.		**kg** lbs.
22315EJ	**75** 2.9528	**160** 6.2992	**55** 2.1654	**471** 105885	**510** 114653	0.33	2.04	3.04	2.00	**2.0** 0.08	**97.0** 3.82	**144.0** 5.67	0.071	**5.17** 11.4
22216EJ	**80** 3.1496	**140** 5.5118	**33** 1.2992	**254** 57101	**278** 62497	0.22	3.14	4.67	3.07	**2.0** 0.08	**95.0** 3.74	**129.0** 5.08	0.065	**2.04** 4.48
22316EJ	**80** 3.1496	**170** 6.6929	**58** 2.2835	**523** 117575	**570** 128141	0.33	2.06	3.06	2.01	**2.0** 0.08	**103.0** 4.06	**153.0** 6.02	0.073	**6.26** 13.8
22217EJ	**85** 3.3465	**150** 5.9055	**36** 1.4173	**300** 67443	**320** 71939	0.22	3.07	4.57	3.00	**2.0** 0.08	**101.0** 3.98	**139.0** 5.47	0.068	**2.55** 5.60
22317EJ	**85** 3.3465	**180** 7.0866	**60** 2.3622	**569** 127916	**623** 140056	0.32	2.11	3.14	2.06	**2.5** 0.10	**110.0** 4.33	**162.0** 6.38	0.076	**7.19** 15.8
S-5169-A[4]	**90** 3.5433	**150** 5.9055	**72** 2.8346	**432** 97200	**555** 125000	0.37	1.83	2.72	1.78	**0.6/2.0**[5] 0.02/0.08	**100.4** 3.95	**136.9** 5.39	0.070	**4.67** 10.3
22218EJ	**90** 3.5433	**160** 6.2992	**40** 1.5748	**355** 79807	**388** 87226	0.23	2.90	4.31	2.83	**2.0** 0.08	**105.0** 4.13	**146.0** 5.75	0.070	**3.30** 7.26
22318EJ	**90** 3.5433	**190** 7.4803	**64** 2.5197	**634** 142529	**703** 158041	0.32	2.09	3.11	2.04	**2.5** 0.10	**116.0** 4.57	**171.0** 6.73	0.079	**8.30** 18.3
22219EJ	**95** 3.7402	**170** 6.6929	**43** 1.6929	**385** 86551	**441** 99141	0.23	2.88	4.29	2.82	**2.0** 0.08	**114.0** 4.49	**155.0** 6.10	0.076	**4.04** 8.89
22319EJ	**95** 3.7402	**200** 7.8740	**67** 2.6378	**694** 156017	**774** 174002	0.32	2.10	3.13	2.05	**2.5** 0.10	**122.0** 4.80	**180.0** 7.09	0.082	**9.90** 21.1
22220EJ	**100** 3.9370	**180** 7.0866	**46** 1.8110	**435** 97792	**502** 112854	0.24	2.85	4.24	2.78	**2.0** 0.08	**120.0** 4.72	**163.0** 6.42	0.079	**4.93** 10.9
23120EJ	**100** 3.9370	**165** 6.4961	**52** 2.0472	**447** 100490	**583** 131064	0.29	2.35	3.50	2.30	**2.0** 0.08	**114.0** 4.49	**150.0** 5.91	0.077	**4.33** 9.53
23220EJ	**100** 3.9370	**180** 7.0866	**60** 2.3740	**553** 124319	**678** 152420	0.30	2.22	3.30	2.17	**2.0** 0.08	**119.0** 4.69	**164.0** 6.46	0.079	**6.47** 14.2
24020EJ	**100** 3.9370	**150** 5.9055	**50** 1.9685	**352** 79133	**506** 113753	0.29	2.32	3.45	2.26	**1.5** 0.06	**111.0** 4.37	**139.0** 5.47	0.074	**2.97** 6.53

[1]See Timken Engineering Manual (order no. 10424) for usage instructions.
[2]Maximum shaft or housing fillet radius that bearing corners will clear.
[3]Geometry constant for Lubrication Life Factor a_{3l} is found in the Bearing Ratings section of the Timken Engineering Manual (order no. 10424).
[4]S-5169-A is a special design (not illustrated).
[5]Max. shaft fillet/max. housing fillet.

Continued on next page.

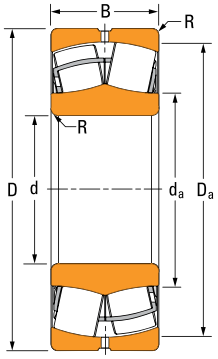

EJ

Continued from previous page.

Bearing Part No.	Bearing Dimensions			Load Ratings		Equivalent Radial Load Factors[1]				Mounting Dimensions			Geometry Factor[3]	Weight
						Dynamic			Static		Backing Diameter			
	Bore	O.D.	Width	Dynamic Radial	Static Radial		$\frac{Fa}{Fr} \le e$	$\frac{Fa}{Fr} \ge e$	In All Cases	Fillet[2] (Max.)	Shaft	Housing		
							X=1	X=0.67	X_0=1					
	d	D	B	C_1	C_o	e	Y	Y	Y_0	R	d_a	D_a	C_g	
	mm in.	**mm** in.	**mm** in.	**kN** lbf	**kN** lbf					**mm** in.	**mm** in.	**mm** in.		**kg** lbs.
22322EJ	**110** 4.3307	**240** 9.4488	**80** 3.1496	**949** 213344	**1050** 236049	0.32	2.08	3.10	2.04	**2.5** 0.10	**144.0** 5.67	**215.0** 8.46	0.076	**17.2** 37.7
23022EJ	**110** 4.3307	**170** 6.6929	**45** 1.7717	**391** 87900	**534** 120048	0.23	2.90	4.32	2.84	**2.0** 0.08	**125.0** 4.92	**158.0** 6.22	0.081	**3.61** 7.95
23122EJ	**110** 4.3307	**180** 7.0866	**56** 2.2047	**518** 116451	**686** 154219	0.28	2.40	3.58	2.35	**2.0** 0.08	**126.0** 4.96	**166.0** 6.54	0.081	**5.47** 12.0
23222EJ	**110** 4.3307	**200** 7.8740	**70** 2.7480	**708** 159165	**887** 199406	0.32	2.11	3.14	2.06	**2.0** 0.08	**131.0** 5.16	**182.0** 7.17	0.085	**9.34** 20.5
24022EJ	**110** 4.3307	**170** 6.6929	**60** 2.3622	**492** 110606	**706** 158715	0.31	2.15	3.21	2.11	**2.0** 0.08	**122.0** 4.80	**157.0** 6.18	0.080	**4.83** 10.6
24122EJ	**110** 4.3307	**180** 7.0866	**69** 2.7165	**591** 132862	**811** 182320	0.34	1.96	2.92	1.92	**2.0** 0.08	**124.0** 4.88	**164.0** 6.46	0.080	**6.70** 14.8
23024EJ	**120** 4.7244	**180** 7.0866	**46** 1.8110	**408** 91722	**574** 129040	0.22	3.02	4.49	2.95	**2.0** 0.08	**134.0** 5.28	**167.0** 6.57	0.084	**3.99** 8.79
23124EJ	**120** 4.7244	**200** 7.8740	**62** 2.4409	**621** 139606	**816** 183444	0.28	2.38	3.54	2.33	**2.0** 0.08	**138.0** 5.43	**182.0** 7.17	0.086	**7.68** 16.9
24024EJ	**120** 4.7244	**180** 7.0866	**60** 2.3622	**523** 117575	**762** 171304	0.29	2.32	3.45	2.26	**2.0** 0.08	**132.0** 5.20	**167.0** 6.57	0.083	**5.20** 11.5
24124EJ	**120** 4.7244	**200** 7.8740	**80** 3.1496	**772** 173553	**1080** 242794	0.36	1.86	2.77	1.82	**2.0** 0.08	**135.0** 5.31	**182.0** 7.17	0.086	**10.0** 22.0
22226EJ	**130** 5.1181	**230** 9.0551	**64** 2.5197	**757** 170180	**945** 212444	0.26	2.62	3.90	2.56	**2.5** 0.10	**155.0** 6.10	**210.0** 8.27	0.079	**11.3** 24.9
23026EJ	**130** 5.1181	**200** 7.8740	**52** 2.0472	**518** 116451	**723** 162537	0.23	2.94	4.37	2.87	**2.0** 0.08	**146.0** 5.75	**185.0** 7.28	0.089	**5.90** 13.0
23126EJ	**130** 5.1181	**210** 8.2677	**64** 2.5197	**679** 152645	**937** 210646	0.27	2.48	3.69	2.43	**2.0** 0.08	**149.0** 5.87	**193.0** 7.60	0.083	**8.60** 19.0
24026EJ	**130** 5.1181	**200** 7.8740	**69** 2.7165	**664** 149273	**966** 217165	0.31	2.21	3.29	2.16	**2.0** 0.08	**144.0** 5.67	**185.0** 7.28	0.088	**7.80** 17.2

[1]See Timken Engineering Manual (order no. 10424) for usage instructions.
[2]Maximum shaft or housing fillet radius that bearing corners will clear.
[3]Geometry constant for Lubrication Life Factor a_{3l} is found in the Bearing Ratings section of the Timken Engineering Manual (order no. 10424).

Continued on next page.

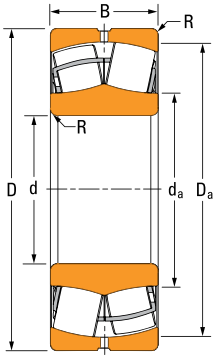

EJ

TABLE 43. SPHERICAL ROLLER BEARING PRODUCT DATA – *continued*

Bearing Part No.	Bearing Dimensions			Load Ratings		Equivalent Radial Load Factors[1]				Mounting Dimensions			Geometry Factor[3]	Weight
							Dynamic		Static		Backing Diameter			
	Bore	O.D.	Width	Dynamic Radial	Static Radial		$\frac{Fa}{Fr} \le e$	$\frac{Fa}{Fr} \ge e$	In All Cases	Fillet[2] (Max.)	Shaft	Housing		
							X=1	X=0.67	X_0=1					
	d	D	B	C_1	C_o	e	Y	Y	Y_0	R	d_a	D_a	C_g	
	mm in.	**mm** in.	**mm** in.	**kN** lbf	**kN** lbf					**mm** in.	**mm** in.	**mm** in.		**kg** lbs.
24126EJ	**130** 5.1181	**210** 8.2677	**80** 3.1496	**798** 179398	**1130** 254034	0.34	1.99	2.96	1.94	**2.0** 0.08	**146.0** 5.75	**192.0** 7.56	0.082	**10.5** 23.1
22228EJ	**140** 5.5118	**250** 9.8425	**68** 2.6772	**863** 194010	**1060** 238297	0.25	2.67	3.98	2.61	**2.5** 0.10	**167.0** 6.57	**228.0** 8.98	0.082	**14.2** 31.3
23028EJ	**140** 5.5118	**210** 8.2677	**53** 2.0866	**551** 123870	**802** 180297	0.22	3.10	4.61	3.03	**2.0** 0.08	**158.0** 6.22	**196.0** 7.72	0.085	**6.20** 13.7
23128EJ	**140** 5.5118	**225** 8.8583	**68** 2.6772	**766** 172204	**1070** 240546	0.27	2.50	3.72	2.45	**2.0** 0.08	**160.0** 6.30	**208.0** 8.19	0.087	**10.4** 22.9
24028EJ	**140** 5.5118	**210** 8.2677	**69** 2.7165	**702** 157816	**1060** 238297	0.29	2.36	3.51	2.31	**2.0** 0.08	**154.0** 6.06	**195.0** 7.68	0.085	**8.20** 18.1
24128EJ	**140** 5.5118	**225** 8.8583	**85** 3.3465	**894** 200979	**1290** 290004	0.34	2.01	2.99	1.96	**2.0** 0.08	**157.0** 6.18	**206.0** 8.11	0.086	**12.7** 28.0
23130EJ	**150** 5.9055	**250** 9.8425	**80** 3.1496	**1000** 224809	**1390** 312484	0.29	2.32	3.45	2.26	**2.0** 0.08	**173.0** 6.81	**229.0** 9.02	0.085	**16.0** 35.3
24030EJ	**150** 5.9055	**225** 8.8583	**75** 2.9528	**808** 181646	**1240** 278763	0.29	2.32	3.46	2.27	**2.0** 0.08	**165.0** 6.50	**209.0** 8.23	0.088	**10.2** 22.5
24130EJ	**150** 5.9055	**250** 9.8425	**100** 3.9370	**1180** 265275	**1680** 377679	0.36	1.86	2.77	1.82	**2.0** 0.08	**169.0** 6.65	**227.0** 8.94	0.084	**19.4** 42.8
23032EJ	**160** 6.2992	**240** 9.4488	**60** 2.3622	**705** 158490	**1040** 233801	0.22	3.12	4.65	3.05	**2.0** 0.08	**180.0** 7.09	**224.0** 8.82	0.093	**9.40** 20.7
24032EJ	**160** 6.2992	**240** 9.4488	**80** 3.1496	**914** 205475	**1410** 316981	0.29	2.32	3.45	2.27	**2.0** 0.08	**176.0** 6.93	**223.0** 8.78	0.092	**12.5** 27.6
24132EJ	**160** 6.2992	**270** 10.6299	**109** 4.2913	**1390** 312484	**2000** 449618	0.37	1.84	2.74	1.80	**2.0** 0.08	**181.0** 7.13	**245.0** 9.65	0.088	**25.2** 55.6
23134EJ	**170** 6.6929	**280** 11.0236	**88** 3.4646	**1220** 274267	**1710** 384423	0.28	2.39	3.55	2.33	**2.0** 0.08	**195.0** 7.68	**258.0** 10.16	0.091	**21.7** 47.8
24034EJ	**170** 6.6929	**260** 10.2362	**90** 3.5433	**1110** 249538	**1730** 388919	0.30	2.22	3.30	2.17	**2.0** 0.08	**189.0** 7.44	**240.0** 9.45	0.097	**17.2** 37.9

[1]See Timken Engineering Manual (order no. 10424) for usage instructions.
[2]Maximum shaft or housing fillet radius that bearing corners will clear.
[3]Geometry constant for Lubrication Life Factor a_{3l} is found in the Bearing Ratings section of the Timken Engineering Manual (order no. 10424).

Continued on next page.

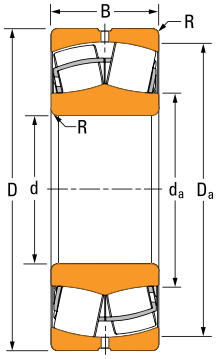

EJ

Continued from previous page.

Bearing Part No.	Bearing Dimensions			Load Ratings		Equivalent Radial Load Factors[1]				Mounting Dimensions			Geometry Factor[3]	Weight
						Dynamic			Static		Backing Diameter			
	Bore	O.D.	Width	Dynamic Radial	Static Radial		$\frac{Fa}{Fr} \le e$	$\frac{Fa}{Fr} \ge e$	In All Cases	Fillet[2] (Max.)	Shaft	Housing		
							X=1	X=0.67	X_0=1					
	d	D	B	C_1	C_o	e	Y	Y	Y_0	R	d_a	D_a	C_g	
	mm in.	**mm** in.	**mm** in.	**kN** lbf	**kN** lbf					**mm** in.	**mm** in.	**mm** in.		**kg** lbs.
24134EJ	**170** 6.6929	**280** 11.0236	**109** 4.2913	**1440** 323725	**2110** 474347	0.35	1.93	2.87	1.88	**2.0** 0.08	**192.0** 7.56	**255.0** 10.04	0.091	**26.4** 58.2
24036EJ	**180** 7.0866	**280** 11.0236	**100** 3.9370	**1320** 296748	**2040** 458610	0.32	2.13	3.17	2.08	**2.0** 0.08	**200.0** 7.87	**258.0** 10.16	0.093	**22.6** 49.8
24136EJ	**180** 7.0866	**300** 11.8110	**118** 4.6457	**1650** 370935	**2450** 550782	0.36	1.90	2.82	1.85	**2.5** 0.10	**204.0** 8.03	**273.0** 10.75	0.095	**33.4** 73.6
23038EJ	**190** 7.4803	**290** 11.4173	**75** 2.9528	**1060** 238297	**1580** 355198	0.23	3.00	4.47	2.93	**2.0** 0.08	**214.0** 8.43	**270.0** 10.63	0.096	**17.8** 39.2
24038EJ	**190** 7.4803	**290** 11.4173	**100** 3.9370	**1330** 298996	**2100** 472099	0.31	2.20	3.27	2.15	**2.0** 0.08	**210.0** 8.27	**268.0** 10.55	0.096	**23.5** 51.8
24138EJ	**190** 7.4803	**320** 12.5984	**128** 5.0394	**1870** 420393	**2760** 620473	0.36	1.85	2.76	1.81	**2.5** 0.10	**215.0** 8.46	**290.0** 11.42	0.078	**41.3** 91.1
23040EJ	**200** 7.8740	**310** 12.2047	**82** 3.2283	**1230** 276515	**1760** 395664	0.23	2.95	4.40	2.89	**2.0** 0.08	**225.0** 8.86	**289.0** 11.38	0.095	**22.6** 49.8
24040EJ	**200** 7.8740	**310** 12.2047	**109** 4.2913	**1560** 350702	**2460** 553030	0.31	2.16	3.22	2.12	**2.0** 0.08	**223.0** 8.78	**286.0** 11.26	0.099	**30.0** 66.1

[1]See Timken Engineering Manual (order no. 10424) for usage instructions.
[2]Maximum shaft or housing fillet radius that bearing corners will clear.
[3]Geometry constant for Lubrication Life Factor a_{3l} is found in the Bearing Ratings section of the Timken Engineering Manual (order no. 10424).

HEAVY-DUTY NEEDLE ROLLER BEARINGS

CONTINUOUS CASTER APPLICATION

Specifically developed for the continuous caster bender support rolls, Timken® heavy-duty needle roller bearings are available with special clearances and higher heat-treatment stabilization.

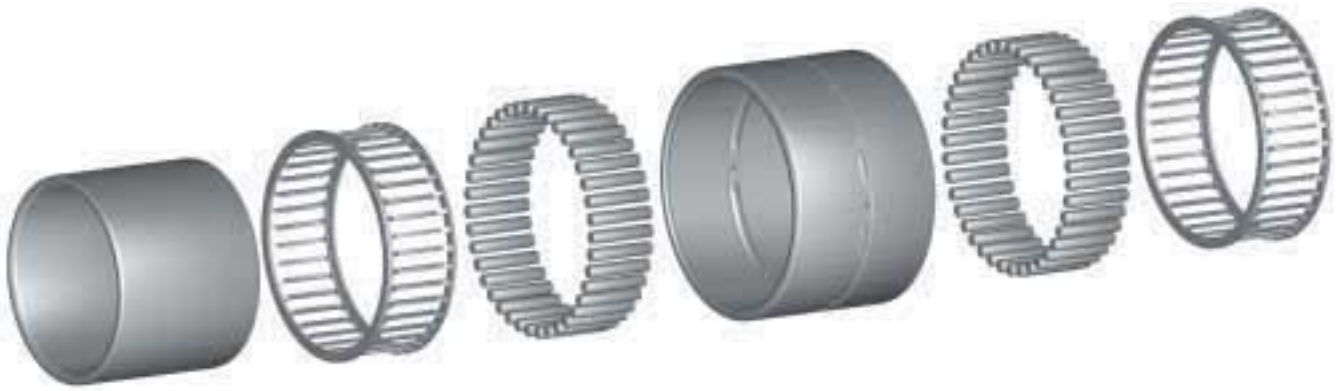

Fig. 29. Heavy-duty needle roller bearing.

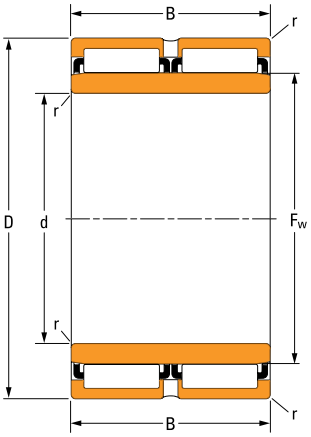

Fig. 30. Needle roller bearing.

OVERALL DIMENSIONS:

d – Bore diameter

D – Outer diameter

B – Bearing width

F_w – Diameter under rollers

r – Shaft/housing maximum fillet radius

NOMENCLATURE

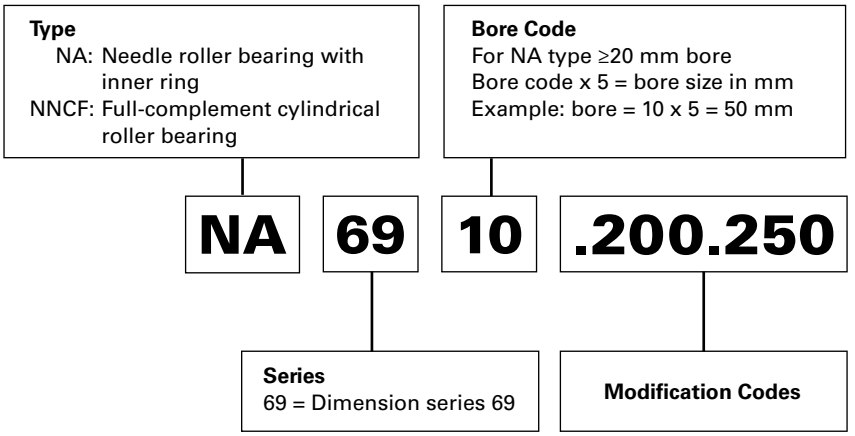

Fig. 31. Heavy-duty needle roller bearing nomenclature.

TABLE 44. MODIFICATION CODES

Timken	SKF	FAG	Timken General Definition
.200.250	.200.250	.200.250	Special radial internal clearance .min.max (micron)
S3	S3	S3	Inner and outer rings stabilized for operation up to 300° C (572° F)
S4	S4	S4	Inner and outer rings stabilized for operation up to 350° C (662° F)

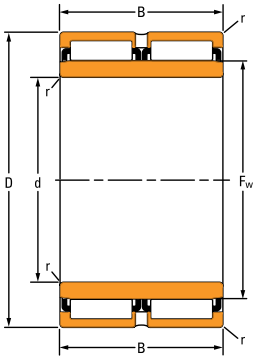

NRB

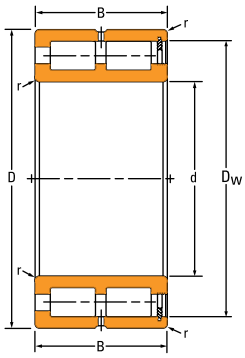

NNCF

TABLE 45. NEEDLE ROLLER BEARING PRODUCT DATA

Bearing Part No.	Type	Bearing Dimensions							Load Ratings		Weight
		Bore d	O.D. D	Width B	Diameter Under Rollers F_w	Diameter Over Rollers D_w	Fillet[1] (Max.) r	Axial Displacement s[2]	Dynamic Radial C_1	Static Radial C_0	
		mm in.	**mm** in.	**mm** in.	**mm** in.	**mm** in.	**mm** in.	**mm** in.	**kN** lbf	**kN** lbf	**kg** lbs.
NA6910	NRB	**50** 1.9685	**72** 2.8346	**40** 1.5748	**58** 2.2835	–	**0.6** 0.02	**1.5** 0.06	**75.7** 17018	**144** 32372	**0.58** 1.27
NA6912	NRB	**60** 2.3622	**85** 3.3465	**45** 1.7717	**68** 2.6772	–	**1.0** 0.04	**2.0** 0.08	**99.3** 22324	**189** 42489	**0.83** 1.83
NA6915	NRB	**75** 2.9528	**105** 4.1339	**54** 2.1260	**85** 3.3465	–	**1.0** 0.04	**2.0** 0.08	**143** 32148	**308** 69241	**1.55** 3.43
NA6917	NRB	**85** 3.3465	**120** 4.7244	**63** 2.4803	**100** 3.9370	–	**1.1** 0.04	**2.0** 0.08	**150** 33721	**416** 93521	**2.43** 5.35
NA6918	NRB	**90** 3.5433	**125** 4.9213	**63** 2.4803	**105** 4.1339	–	**1.1** 0.04	**2.0** 0.08	**175** 39342	**427** 95993	**2.64** 5.82
NNCF5008	NNCF	**40** 1.5748	**68** 2.6772	**38** 1.4961	–	**61.700** 2.4291	**1.2** 0.05	**1.5** 0.06	**106** 23830	**140** 31473	**0.56** 1.23

[1]Maximum shaft or housing fillet radius to clear corners of bearing.
[2]Maximum axial displacement.

ADAPT™ BEARINGS
CONTINUOUS CASTER APPLICATION

The Timken ADAPT™ full-complement roller bearing is specifically designed for continuous caster support rolls. The innovative design offers combined high-radial load capacity, with simultaneous misalignment and axial displacement capabilities.

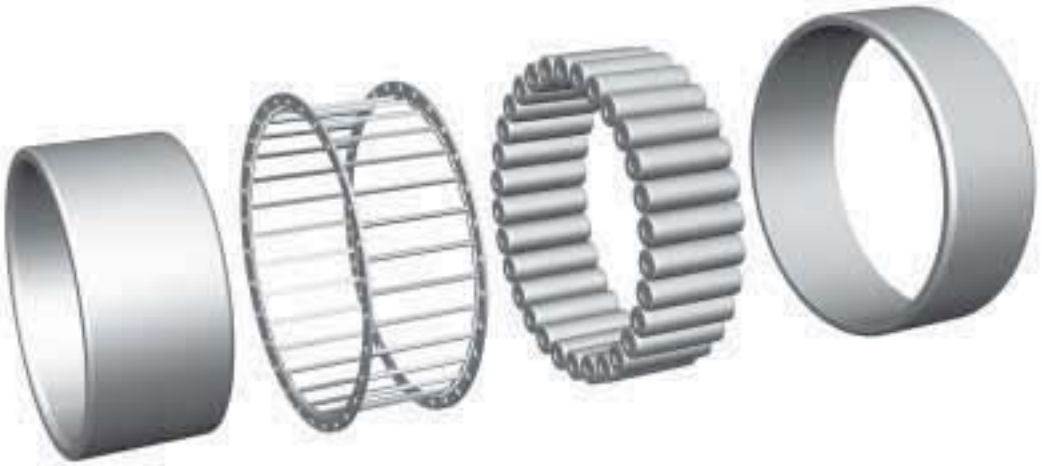

Fig. 32. ADAPT™ bearing.

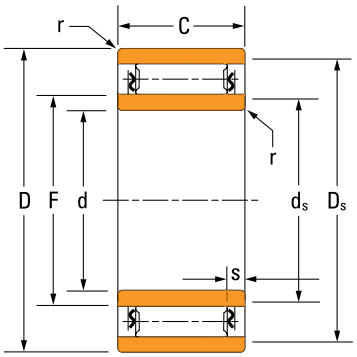

Fig. 33. ADAPT bearing.

OVERALL DIMENSIONS:

d – Bore diameter

D – Outer diameter

C – Bearing width

F – Diameter under rollers (DUR)

r – Fillet

d_s – Shaft shoulder

D_s – Housing shoulder

s – Axial displacement

NOMENCLATURE

Dimension Series
ADAPT bearings are defined by a series based on spherical roller bearing nomenclature. Example: same envelope dimensions as spherical roller bearing 24024

Type

Retainer Designation:
Blank = Standard design
V = Full complement

Radial Internal Clearance
Continuous caster bearing are typically supplied as C3 or C4 clearances (depending upon the application).

TA	40	24	V	W75	C3

Bore Code
Bore code x 5 = bore size in mm
Example: bore = 24 x 5 = 120 mm

Modification Code
W75=Snapr ing

Fig. 34. ADAPT bearing nomenclature.

ADAPT BEARING FEATURES

- Bearing boundary dimensions conform to standard ISO dimensions, but the internal geometry and separable inner ring concepts are unique.
- Simultaneous full misalignment and axial displacement capabilities, for optimum performance.
- All bearings have a misalignment capability of +/– 0.5 degrees (8.7 milliradians).

ASSEMBLY NOTES

The ADAPT bearing is designed to be used in a float position on a caster roll, and can be mounted at either the roll's center or end support position, depending on the caster and roll configuration.

The end support position requires an end plate to clamp the bearing. The end plate geometry needs to be validated to ensure the ADAPT bearing is correctly located with an end plate that restrains the ADAPT outer assembly as shown below.

If the end plate does not restrain the roller assembly, the customer should modify or replace the original end plate with one that will clamp the ADAPT bearing inner ring and capture the outer assembly. The correct diameter for this end plate is given in the product data tables.

Please refer to Timken ADAPT™ Bearing Installation Guide (order no. 10477) for more information.

Mounting and installation procedures for each application should be reviewed prior to installing the ADAPT bearing. Contact your Timken engineer for assistance.

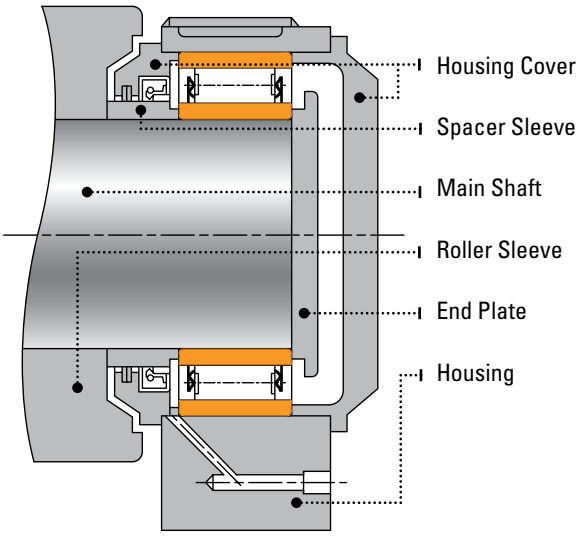

Fig. 35. ADAPT bearing.

⚠ WARNING ***Failure to observe the following warnings could create a risk of serious injury.***

ADAPT™ bearings feature a separable inner ring. Care must be taken when handling or installing a fully assembled bearing to prevent the inner ring from accidentally sliding out of the assembly. When using this bearing to replace a unitized bearing it is important to check the design of the installation for positive retention on the shaft.

Proper maintenance and handling practices are critical.

Always follow installation instructions and maintain proper lubrication.

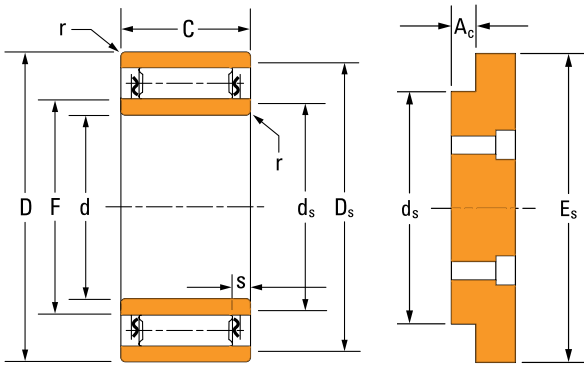

TABLE 46. ADAPT™ PRODUCT DATA

Bearing Part No.	Bearing Dimensions				Static Radial Load Rating	Mounting Dimensions						Weight
	Bore d	O.D. D	Width C	DUR[1] F	C_0	Axial Displacement s	Fillet[2] (Max.) r	Shoulder d_s	Shoulder D_s	End Plate Clearance A_c	End Plate O.D. E_s	
	mm in.	**mm** in.	**mm** in.	**mm** in.	**kN** lbf	**±mm** ±in.	**mm** in.	**mm** in.	**mm** in.	**mm** in.	**mm** in.	**kg** lbs.
TA4020V	**100** 3.9370	**150** 5.9055	**50** 1.9685	**112.880** 4.4441	**580** 130389	**6.0** 0.24	**1.3** 0.05	**111.0** 4.37	**139.5** 5.49	**3.5** 0.14	**131.0** 5.16	**3.00** 6.61
TA5020V	**100** 3.9370	**150** 5.9055	**67** 2.6378	**112.880** 4.444	**872** 196033	**5.0** 0.20	**1.5** 0.06	**110.6** 4.35	**141.0** 5.55	**3.5** 0.14	**132.5** 5.22	**4.30** 9.48
TA3120V	**100** 3.9370	**165** 6.4961	**52** 2.0472	**116.190** 4.5744	**653** 146800	**5.0** 0.20	**2.0** 0.08	**113.0** 4.45	**153.0** 6.02	**4.0** 0.16	**142.0** 5.59	**4.50** 9.92
TA4022V	**110** 4.3307	**170** 6.6929	**60** 2.3622	**125.375** 4.9360	**810** 182095	**6.0** 0.24	**1.8** 0.07	**123.5** 4.86	**157.0** 6.18	**4.0** 0.16	**148.0** 5.83	**4.90** 10.8
TA4122V	**110** 4.3307	**180** 7.0866	**69** 2.7165	**127.900** 5.0354	**988** 222111	**6.0** 0.24	**2.0** 0.08	**123.9** 4.88	**166.0** 6.54	**4.5** 0.18	**155.0** 6.10	**7.10** 15.7
TA4024V	**120** 4.7244	**180** 7.0866	**60** 2.3622	**135.445** 5.3325	**880** 197832	**6.0** 0.24	**1.8** 0.07	**133.5** 5.26	**167.0** 6.57	**4.0** 0.16	**158.0** 6.22	**5.40** 11.9
TA4026V	**130** 5.1181	**200** 7.8740	**69** 2.7165	**147.770** 5.8177	**1140** 256282	**6.0** 0.24	**1.8** 0.07	**146.0** 5.75	**185.0** 7.28	**4.5** 0.18	**174.0** 6.85	**7.80** 17.2
TA4126V	**130** 5.1181	**210** 8.2677	**80** 3.1496	**150** 5.9055	**1390** 312484	**6.0** 0.24	**2.0** 0.08	**146.1** 5.75	**194.0** 7.64	**5.0** 0.20	**181.0** 7.13	**11.2** 24.7
TA2226V	**130** 5.1181	**230** 9.0551	**64** 2.5197	**154.490** 6.0823	**1070** 240000	**6.0** 0.24	**2.5** 0.10	**149.5** 5.89	**210.5** 8.29	**5.6** 0.22	**193.3** 7.61	**11.6** 25.6
TA4028V	**140** 5.5118	**210** 8.2677	**69** 2.7165	**158.030** 6.2217	**1220** 274267	**6.0** 0.24	**1.8** 0.07	**156.0** 6.14	**195.0** 7.68	**4.5** 0.18	**183.0** 7.20	**8.40** 18.5
TA4030V	**150** 5.9055	**225** 8.8583	**75** 2.9528	**169.320** 6.6661	**1430** 321477	**6.4** 0.25	**1.9** 0.07	**167.0** 6.57	**209.0** 8.23	**4.5** 0.18	**196.0** 7.72	**10.4** 22.9
TA4130V	**150** 5.9055	**250** 9.8425	**100** 3.9370	**175.400** 6.9055	**1990** 447370	**8.0** 0.31	**2.0** 0.08	**170.9** 6.73	**229.5** 9.04	**5.8** 0.23	**213.7** 8.41	**20.5** 45.2
TA4032V	**160** 6.2992	**240** 9.4488	**80** 3.1496	**180.600** 7.1102	**1680** 377679	**6.0** 0.24	**1.9** 0.07	**178.5** 7.03	**223.0** 8.78	**5.2** 0.20	**210.0** 8.27	**12.9** 28.4
TA4034V	**170** 6.6929	**260** 10.2362	**90** 3.5433	**193.370** 7.6130	**1980** 445122	**7.4** 0.29	**1.9** 0.07	**191.5** 7.54	**240.5** 9.47	**5.2** 0.20	**225.0** 8.86	**17.3** 38.1

[1]DUR–Diameter Under Rollers.
[2]Maximum shaft or housing fillet radius to clear corners of bearing.

FOUR-ROW CYLINDRICAL ROLLER BEARINGS

Timken's four-row cylindrical bearings are used in work roll or backup roll positions in flat products, long products and structural mills. Designed with high radial capacity.

Please refer to Timken® Cylindrical Roller Bearing Catalog (order no. 10447) for more information on our complete range of single- and multi-row cylindrical roller bearings in sizes from 65 mm (2.559 in.) to 1040 mm (40.945 in.) bore.

Fig. 36. Cylindrical roller bearing.

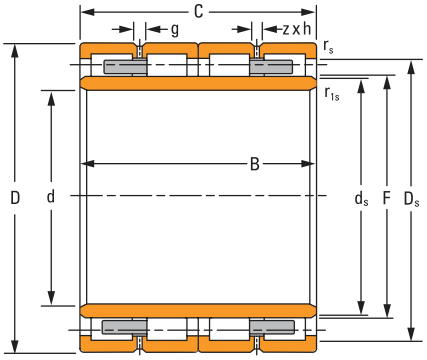

Fig. 37. Cylindrical roller bearing.

OVERALL DIMENSIONS:

d – Bore diameter

D – Outer diameter

B – Inner ring width

C – Outer ring width

F – Diameter under rollers

d_s – Shaft shoulder diameter

D_s – Housing shoulder diameter

r_s – Housing maximum radius

r_{1s} – Shaft maximum radius

g – Lubrication groove

zxh – Lubrication groove chamfer

NOMENCLATURE

BEARING ASSEMBLY

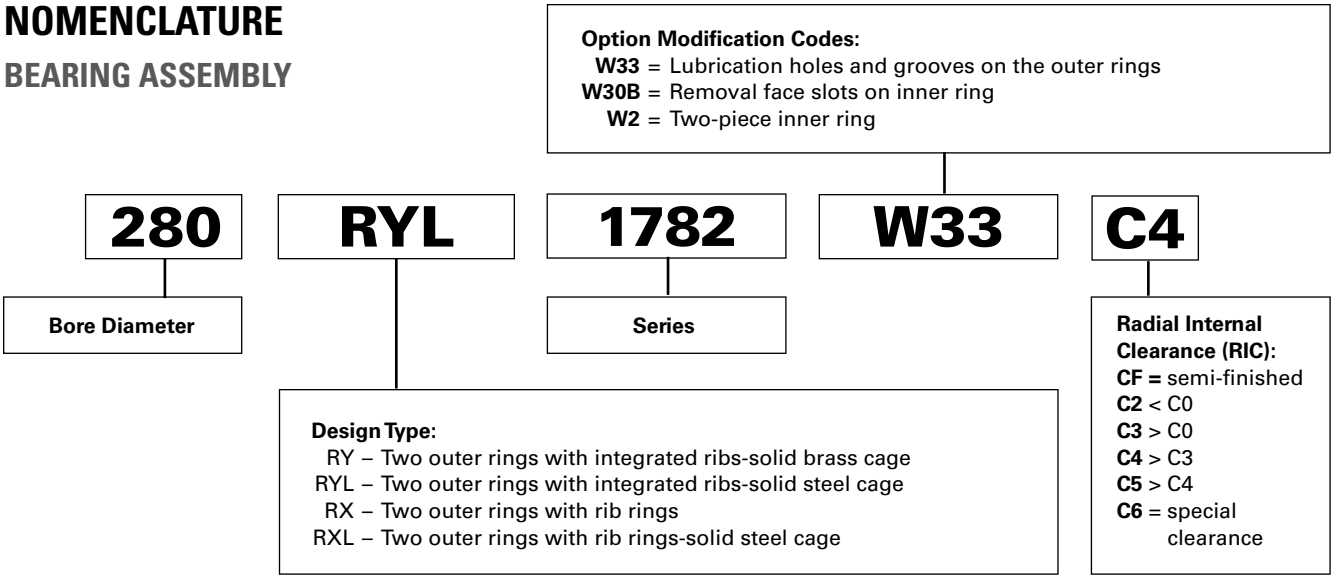

Fig. 38. Four-row cylindrical roller bearing assembly nomenclature.

MODIFICATION CODES

TABLE 47. MODIFICATION CODES

Modification Code	General Definition
W2	Two-piece inner ring
W23	Wide inner ring
W30	Lube slots in face of inner ring
W30A	Removal slots on one face of inner ring
W30B	Removal slots on both faces of inner ring
W30G	Lube slots in one face of inner ring
W33	Outer ring with standard lube holes and machined lube groove in center of O.D.
W50A	Tapped lifting holes in face of inner ring
W69	Inner ring with spiral lube groove
W99	One flange inner ring (for multi-row)
W217	W23-wide inner ring. W30B-removal slots on both faces of inner. W69-inner ring with spiral lube groove.
W224	W23-wide inner ring. W30G-lube slots in one face of inner. W69-inner ring with spiral lube groove. W99-one flange inner ring (for multi-row).

CLEARANCE CODES

TABLE 48. CLEARANCE CODES

Modification Code	General Definition
C2, C0, C3, C4, C5	Radial internal clearance per ISO 5753
C6, C7, C8, C9	Special radial internal clearance
CF1, CF2, …	**Customer Finish:** The inner ring is supplied with added stock (semi-finished) on the outside diameter to account for additional finish grinding required after shrink-fitting the inner ring set onto the neck in order to suite the mounted RIC requirement.

NOTE: Most long-product applications use C4 or sometimes C3 radial internal clearances.
The Radial Internal Clearance (RIC) for the bearing assembly must be included when ordering either the complete assembly or the inner-ring set. It is advisable to order the inner-ring set independent of the outer-ring set when the final grind of the inner-ring O.D. is accomplished after mounting on the roll neck.

INNER-ASSEMBLY NOMENCLATURE

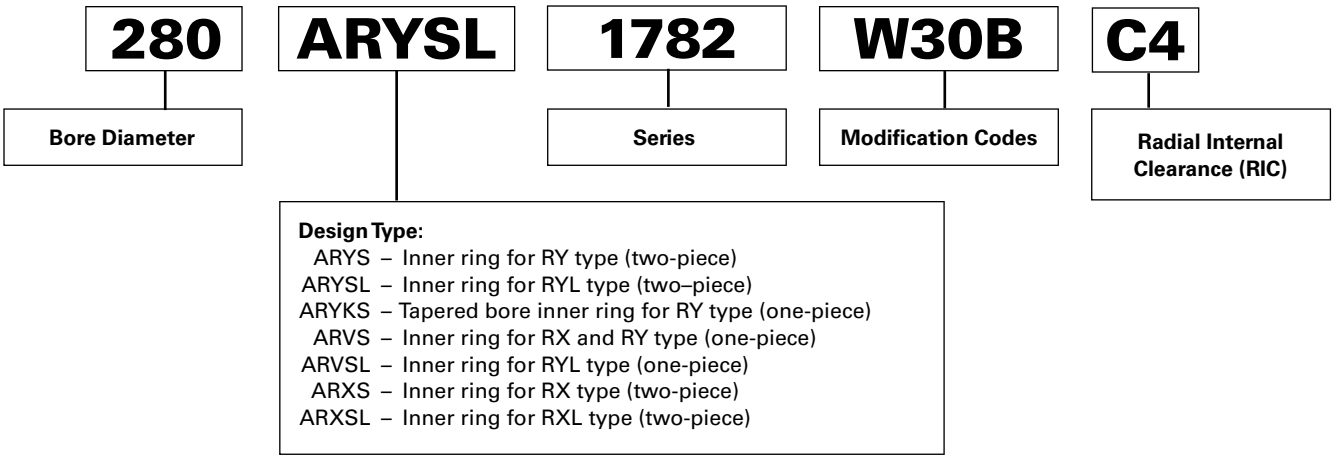

Fig. 39. Four-row cylindrical roller inner-ring nomenclature.

OUTER-ASSEMBLY NOMENCLATURE

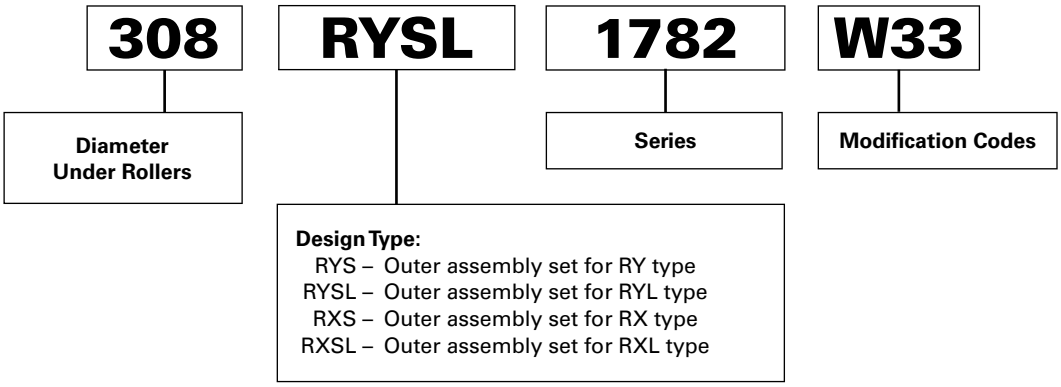

Fig. 40. Four-row cylindrical roller outer-assembly nomenclature.

FOUR-ROW CYLINDRICAL ROLLER BEARING DESIGN TYPES (TIGHT FIT MOUNTING)

RY-1, RYL-1

- Two outer rings with integral ribs.
- One-piece inner ring.
- Lubrication grooves and holes on outer rings.
- RY-1 – two solid-brass cages.
- RYL-1 – two solid-steel cages.

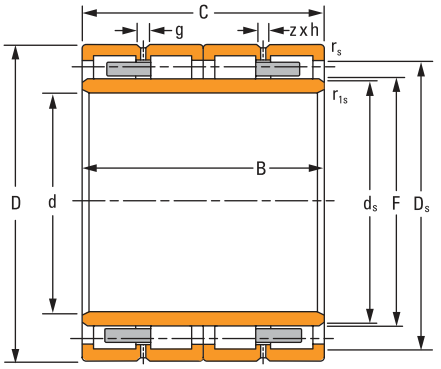

RY-1, RYL-1

RY-2, RYL-2

- Two outer rings with integral ribs.
- Two inner rings.
- Lubrication grooves and holes on outer rings
- RY-2 – two solid-brass cages.
- RYL-2 – two solid-steel cages.

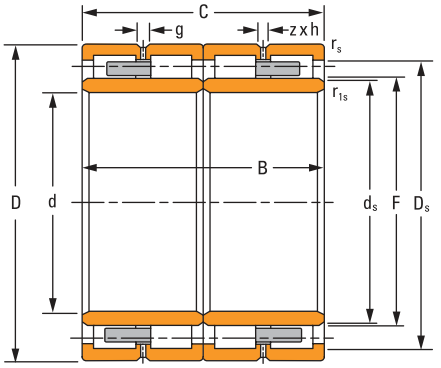

RY-2, RYL-2

RY-3, RYL-3

- Two outer rings with integral ribs.
- Two inner rings.
- Lubrication face slots on outer rings.
- RY-3 – two solid-brass cages.
- RYL-3 – two solid-steel cages.

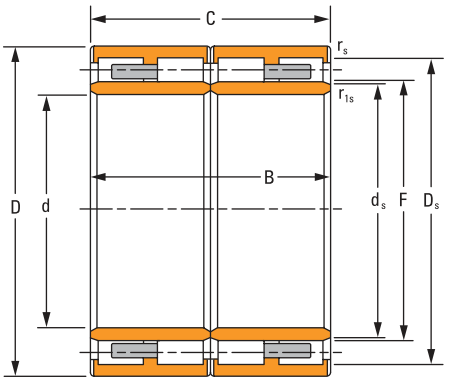

RY-3, RYL-3

RYL-6

- Two outer rings with integral ribs.
- One-piece inner ring.
- Lubrication face slots on outer rings.
- Two solid-steel cages.

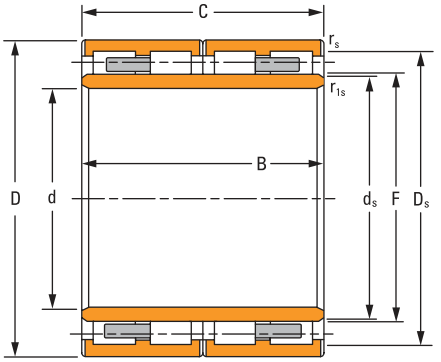

RYL-6

RY-10

- Two outer rings with integral ribs.
- Two inner rings.
- Lubrication face slots on outer rings.
- Solid-brass cages.

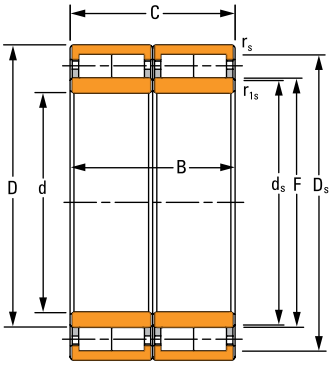

RY-10

RX-1, RX-9, RX-11

- Two outer rings with three rib rings.
- Two inner rings.
- Four pin-type steel cages.
- RX-1 – with lubrication grooves and holes on outer rings (illustrated).
- RX-9 – with oil-mist nozzles and O-rings in outer rings.
- RX-11 – with lubrication grooves, holes and O-rings on outer rings.

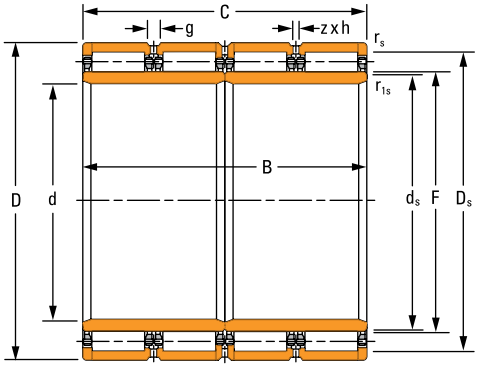

RX-1, RX-9, RX-11

RX-2, RXL-2

- Two outer rings with three rib rings.
- Two inner rings.
- Lubrication grooves and holes on outer rings.
- Lubrication face slots on outer rib rings.
- RX-2 – two solid-brass cages.
- RXL-2 – two solid-steel cages.

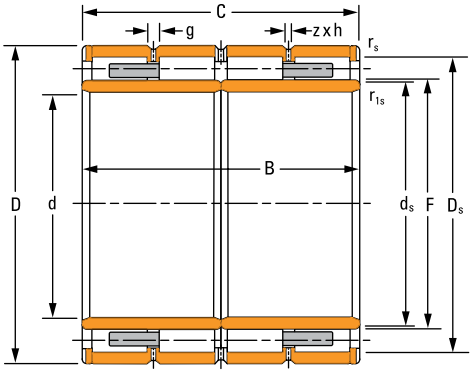

RX-2, RXL-2

RX-7

- Two outer rings with three rib rings.
- Four inner rings.
- Four pin-type steel cages.
- Lubrication grooves and holes on outer rings.

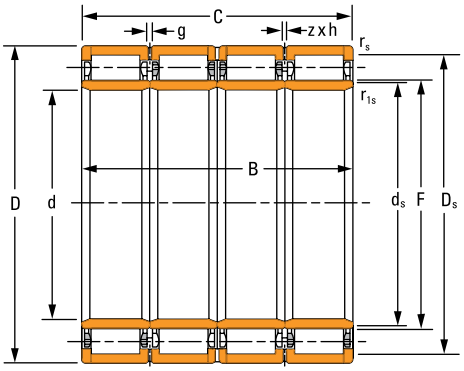

RX-7

RX-8

- Two outer rings with three rib rings.
- Two inner rings.
- Extended inner ring on one side.
- Four pin-type steel cages.
- Lubrication grooves and holes on outer rings.

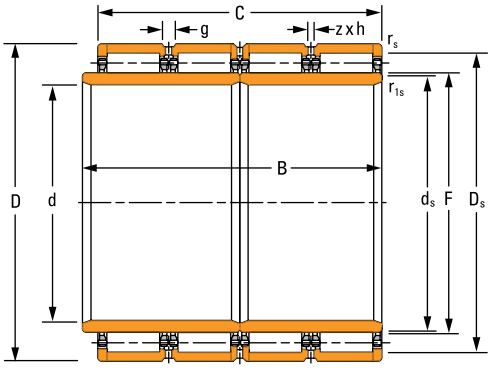

RX-8

RX-10

- Two outer rings with three rib rings.
- Two inner rings.
- Extended inner ring on one side.
- Four pin-type steel cages.
- Lubrication grooves and holes on outer rings.
- With oil-mist nozzles and O-rings in outer rings.

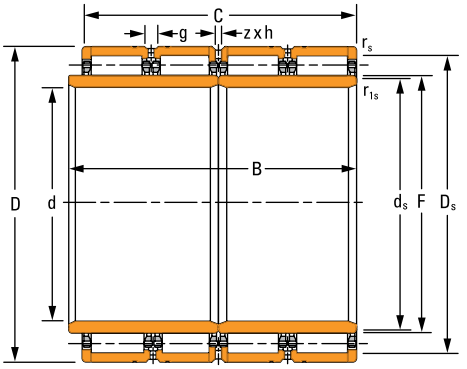

RX-10

RXK-1, RXK-2

- Two outer rings with three rib rings.
- One-piece tapered-bore inner ring.
- Four pin-type steel cages.
- Lubrication grooves and holes on outer rings.
- RXK-1 – with oil-mist nozzles and O-rings in outer rings (illustrated).
- RXK-2 – without oil-mist nozzles and O-rings in outer rings.

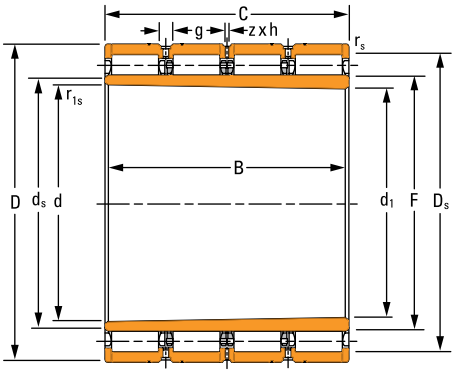

RXK-1, RXK-2

FOUR-ROW CYLINDRICAL ROLLER BEARING DESIGN TYPES (LOOSE FIT MOUNTING)

RX-3, RXL-3

- Two outer rings with three rib rings.
- Two inner rings.
- Extended inner ring on one side.
- Lubrication grooves and face slots on inner rings.
- Lubrication grooves and holes on outer rings.
- Lubrication face slots on outer rib rings.
- RX-3 – two solid-brass cages.
- RXL-3 – two solid-steel cages.

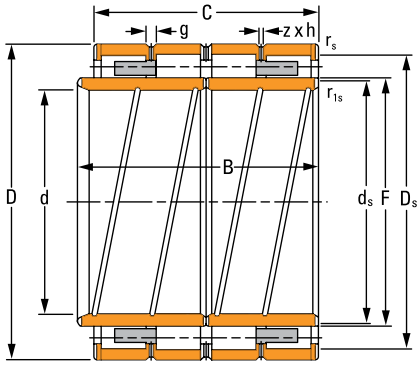

RX-3, RXL-3

RX-4

- Two outer rings with three rib rings.
- Two inner rings.
- Extended inner ring on one side.
- Four pin-type steel cages.
- Lubrication grooves and face slots on inner rings.
- Lubrication grooves and holes on outer rings.

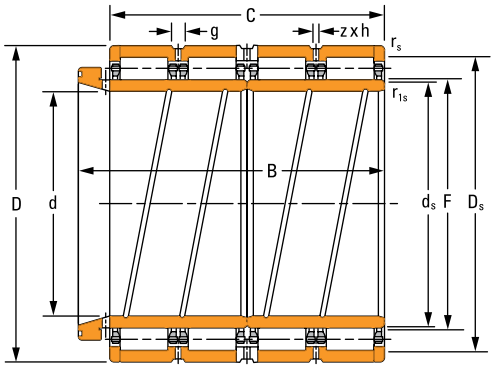

RX-4

RX-5

- Two outer rings with three rib rings.
- Two inner rings.
- Four pin-type steel cages.
- Lubrication grooves and face slots on inner rings.
- Lubrication grooves and holes on outer rings.
- Identical width on outer and inner assembly.

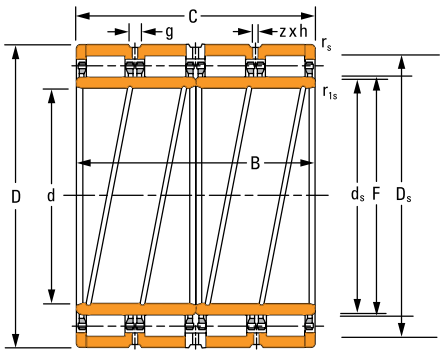

RX-5

RX-6

- Two outer rings with three rib rings.
- Two inner rings.
- Extended inner ring on one side.
- Four pin-type steel cages.
- Lubrication grooves and face slots on inner rings.
- Lubrication grooves and holes on outer rings.

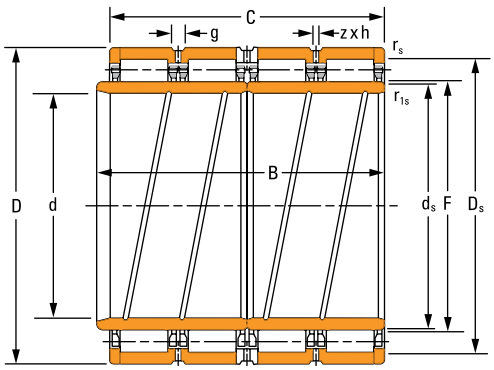

RX-6

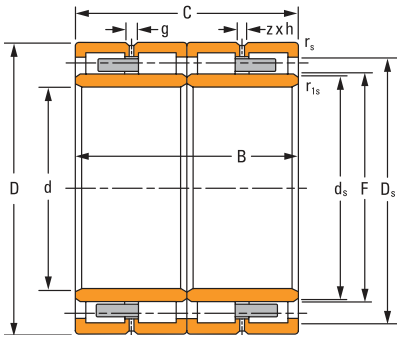

RYL-2

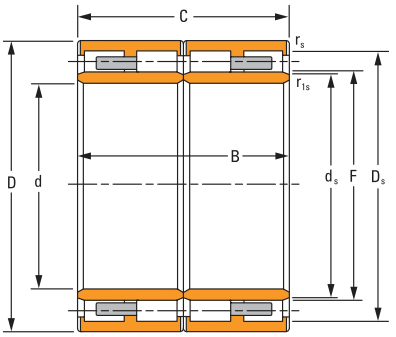

RYL-3

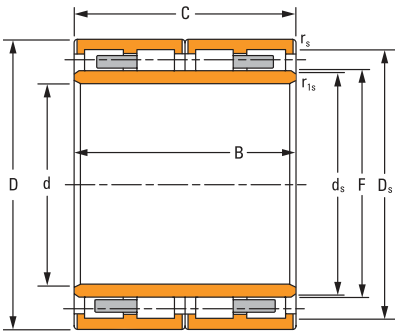

RYL-6

TABLE 49. FOUR-ROW CYLINDRICAL ROLLER BEARING PRODUCT DATA

Bearing Dimensions					Dynamic Load Rating[2]	Bearing Assembly Part Number	
Bore d	O.D. D	Width B	Width C	DUR[1] F	$C_{1(4)}$	Bearing	Type
mm in.	**mm** in.	**mm** in.	**mm** in.	**mm** in.	**kN** lbf		
145 5.7087	**225** 8.8583	**156** 6.1417	**156** 6.1417	**169** 6.6535	**1100** 248000	145RYL1452	RYL-6
160 6.2992	**230** 9.0551	**130** 5.1181	**130** 5.1181	**180** 1.0866	**856** 192400	160RYL1468	RYL-6
160 6.2992	**230** 9.0551	**168** 6.6142	**168** 6.6142	**179** 7.0472	**1188** 268000	160RYL1467	RYL-6
165.1 6.5000	**225.425** 8.8750	**168.275** 6.6250	**168.275** 6.6250	**181** 7.1260	**1158** 260000	165RYL1451	RYL-3
170 6.6929	**230** 9.0551	**160** 6.2992	**160** 6.2992	**185.5** 7.3032	**1194** 268000	170RYL6462	RYL-2
180 7.0866	**260** 10.2362	**168** 6.6142	**168** 6.6142	**202** 7.9528	**1452** 326000	180RYL1527	RYL-6
190 7.4803	**260** 10.2362	**168** 6.6142	**168** 6.6142	**212** 8.3465	**1288** 290000	190RYL1528	RYL-6
190 7.4803	**270** 10.6299	**200** 7.8740	**200** 7.8740	**212** 8.3465	**1702** 382000	190RYL1543	RYL-6
200 7.8740	**270** 10.6299	**170** 6.6929	**170** 6.6929	**222** 8.7402	**1334** 300000	200RYL1544	RYL-6
200 7.8740	**270** 10.6299	**200** 7.8740	**200** 7.8740	**222.250** 8.7500	**1554** 350000	200RYL1545	RYL-6
200 7.8740	**280** 11.0236	**170** 6.6929	**170** 6.6929	**222** 8.7402	**1542** 346000	200RYL1566	RYL-6
200 7.8740	**280** 11.0236	**200** 7.8740	**200** 7.8740	**222** 8.7402	**1730** 388000	200RYL1567	RYL-6
200 7.8740	**290** 11.4173	**192** 7.5591	**192** 7.5591	**226** 8.8976	**1774** 398000	200RYL1585	RYL-6
210 8.2677	**290** 11.4173	**192** 7.5591	**192** 7.5591	**236** 9.2913	**1622** 364000	210RYL1584	RYL-6
220 8.6614	**310** 12.2047	**192** 7.5591	**192** 7.5591	**246** 9.6850	**1840** 414000	220RYL1621	RYL-6

[1]DUR–Diameter Under Rollers.
[2]Based on 1 x 10^6 revolutions L_{10} life, for the ISO life calculation method.

Sub Assembly Part Number		Mounting Dimensions				Lubrication Data			Weight
		Fillet Radius		Backing Diameter		Groove	Hole Diameter	No. of Holes	
		Maximum		Shaft	Housing				
Inner Ring	Outer Assembly	r_s [3]	r_{1s} [3]	d_s	D_s	g	h	z	
		mm in.	**mm** in.	**mm** in.	**mm** in.	**mm** in.	**mm** in.		**kg** lbs.
145ARVSL1452	169RYSL1452	**2.0** 0.08	**2.0** 0.08	**164.2** 6.46	**205.0** 8.07	–	–	–	**23.0** 50.7
160ARVSL1468	180RYSL1468	**1.5** 0.06	**1.5** 0.06	**174.6** 6.87	**216.0** 8.50	–	–	–	**16.8** 37.0
160ARVSL1467	179RYSL1467	**2.0** 0.08	**2.0** 0.08	**174.5** 6.87	**211.0** 8.31	–	–	–	**23.1** 50.8
165ARVSL1451	181RYSL1451	**1.5** 0.06	**1.5** 0.06	**176.2** 6.94	**211.0** 8.31	–	–	–	**19.6** 43.2
170ARYSL6462	186RYSL6462	**1.5** 0.06	**1.5** 0.06	**180.8** 7.12	**215.5** 8.48	**6.8** 0.27	**3.0** 0.12	6	**19.0** 41.8
180ARVSL1527	202RYSL1527	**2.1** 0.08	**2.1** 0.08	**196.3** 7.73	**242.0** 9.53	–	–	–	**29.7** 65.4
190ARVSL1528	212RYSL1528	**2.0** 0.08	**2.0** 0.08	**207.2** 8.16	**244.0** 9.61	–	–	–	**26.5** 58.2
190ARVSL1543	212RYSL1543	**2.1** 0.08	**2.1** 0.08	**207.0** 8.15	**250.0** 9.84	–	–	–	**36.7** 80.8
200ARVSL1544	222RYSL1544	**2.1** 0.08	**2.1** 0.08	**216.9** 8.54	**254.0** 10.00	–	–	–	**27.9** 61.5
200ARVSL1545	222RYSL1545	**2.1** 0.08	**2.1** 0.08	**216.7** 8.53	**254.3** 10.01	–	–	–	**33.3** 73.2
200ARVSL1566	222RYSL1566	**2.1** 0.08	**2.1** 0.08	**217.5** 8.56	**262.0** 10.31	–	–	–	**32.4** 71.2
200ARVSL1567	222RYSL1567	**2.1** 0.08	**2.1** 0.08	**218.0** 8.58	**260.0** 10.24	–	–	–	**39.0** 86.0
200ARVSL1585	226RYSL1585	**2.1** 0.08	**2.1** 0.08	**220.6** 8.69	**270.0** 10.63	–	–	–	**41.8** 92.1
210ARVSL1584	236RYSL1584	**2.1** 0.08	**2.1** 0.08	**230.0** 9.05	**272.0** 10.71	–	–	–	**38.9** 85.5
220ARVSL1621	246RYSL1621	**3.0** 0.12	**3.0** 0.12	**240.5** 9.47	**290.0** 11.42	–	–	–	**45.1** 99.3

[3]Maximum shaft or housing fillet radius that bearing corner will clear.

Continued on next page.

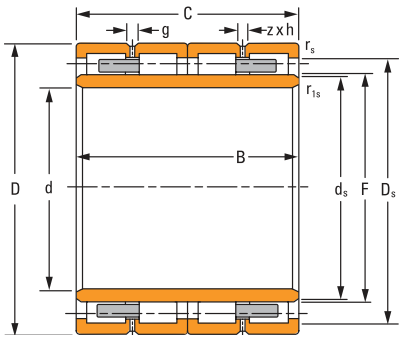

RY-1

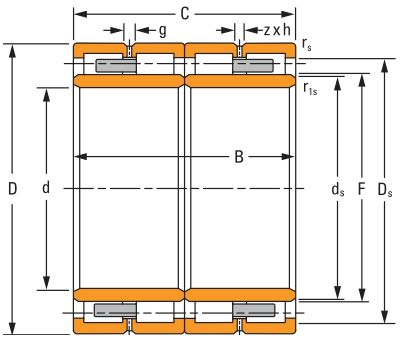

RY-2, RYL-2

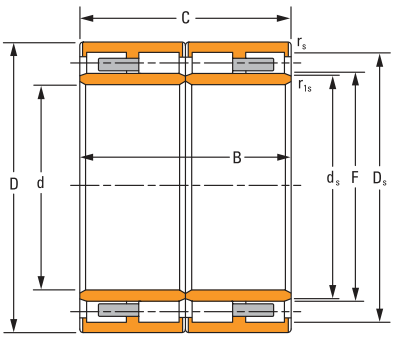

RYL-3

TABLE 49. FOUR-ROW CYLINDRICAL ROLLER BEARING PRODUCT DATA *– continued*

Bearing Dimensions					Dynamic Load Rating[2]	Bearing Assembly Part Number	
Bore d	O.D. D	Width B	Width C	DUR[1] F	$C_{1(4)}$	Bearing	Type
mm in.	**mm** in.	**mm** in.	**mm** in.	**mm** in.	**kN** lbf		
220 8.6614	**340** 13.3858	**218** 8.5827	**218** 8.5827	**257.18** 10.1252	**2320** 522000	220RY1683	RY-1
230 9.0551	**330** 12.9921	**206** 8.1102	**206** 8.1102	**260** 10.2362	**2120** 478000	230RYL1667	RYL-6
240 9.4488	**320** 12.5984	**200** 7.8740	**200** 7.8740	**260** 10.2362	**1994** 448000	240RY1643	RY-2
240 9.4488	**330** 12.9921	**220** 8.6614	**220** 8.6614	**270** 10.6299	**1924** 432000	240RYL1668	RYL-6
250 9.8425	**340** 13.3858	**230** 9.0551	**230** 9.0551	**276** 10.8661	**1952** 438800	250RY1681	RY-1
260 10.2362	**370** 14.5669	**220** 8.6614	**220** 8.6614	**292** 11.4961	**2580** 582000	260RYL1744	RYL-6
260 10.2362	**380** 14.9606	**280** 11.0236	**280** 11.0236	**294** 11.5748	**3240** 728000	260RY1763	RY-2
280 11.0236	**380** 14.9606	**290** 11.4173	**290** 11.4173	**308** 12.1260	**3180** 714000	280RYL1764	RYL-3
280 11.0236	**390** 15.3543	**220** 8.6614	**220** 8.6614	**312** 12.2835	**2620** 590000	280RYL1783	RYL-6
280 11.0236	**390** 15.3543	**275** 10.8268	**275** 10.8268	**308** 12.1260	**3049** 685500	280RYL1782	RYL-2
290 11.4173	**440** 17.3228	**310** 12.2047	**310** 12.2047	**328** 12.9134	**4460** 1002000	290RYL1881	RYL-3
300 11.8110	**420** 16.5354	**300** 11.8110	**300** 11.8110	**332** 13.0709	**4140** 932000	300RX1846	RX-1
300 11.8110	**420** 16.5354	**300** 11.8110	**300** 11.8110	**332** 13.0709	**4080** 918000	300RXL1845	RXL-2
300 11.8110	**420** 16.5354	**300** 11.8110	**320** 13.1148	**332** 13.0709	**4080** 918000	300RXL1845	RXL-3[4]
300 11.8110	**500** 19.6850	**360** 14.1732	**360** 14.1732	**354.25** 13.9469	**6200** 1392000	300RY2002	RY-2

[1]DUR–Diameter Under Rollers.
[2]Based on 1 x 10^6 revolutions L_{10} life, for the ISO life calculation method.
[4]Not illustrated.
[5]RXL-3 configuration requires specifying W217 modification code.

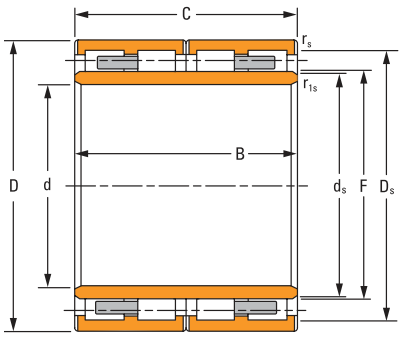

RYL-6

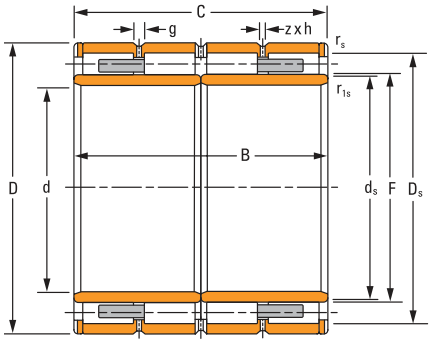

RXL-2

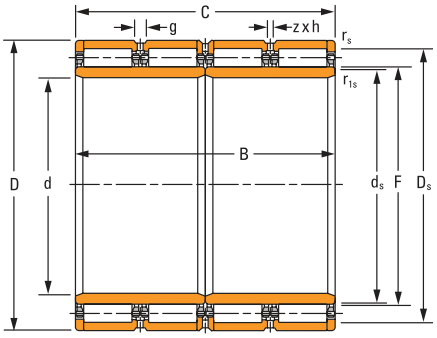

RX-1

Sub Assembly Part Number		Mounting Dimensions				Lubrication Data			Weight
		Fillet Radius		Backing Diameter					
		Maximum		Shaft	Housing	Groove	Hole Diameter	No. of Holes	
Inner Ring	Outer Assembly	r_s [3]	r_{1s} [3]	d_s	D_s	g	h	z	
		mm in.	**mm** in.	**mm** in.	**mm** in.	**mm** in.	**mm** in.		**kg** lbs.
220ARVS1683	257RYS1683	**3.0** 0.12	**3.0** 0.12	**251.0** 9.88	**309.2** 12.17	**10.0** 0.39	**5.0** 0.20	8	**75.6** 166
230ARVSL1667	260RYSL1667	**2.1** 0.08	**2.1** 0.08	**253.5** 9.98	**308.0** 12.13	–	–	–	**58.3** 128
240ARYS1643	260RYS1643	**2.1** 0.08	**2.1** 0.08	**253.4** 9.98	**304.0** 11.97	–	–	–	**43.0** 95
240ARVSL1668	270RYSL1668	**2.1** 0.08	**2.1** 0.08	**264.2** 75.49	**306.0** 12.05	–	–	–	**56.7** 125
250ARVS1681	276RYS1681	**4.0** 0.16	**3.5x45°** 0.14x45°	**269.5** 10.61	**320.0** 12.60	**10.0** 0.39	**5.0** 0.20	6	**60.3** 133
260ARVSL1744	292RYSL1744	**3.0** 0.12	**3.0** 0.12	**285.0** 11.22	**344.0** 13.54	–	–	–	**108** 237
260ARYS1763	294RYS1763	**3.0** 0.12	**3.0** 0.12	**286.5** 11.28	**350.0** 13.78	**10.0** 0.39	**5.0** 0.20	6	**108** 237
280ARVSL1764	308RYSL1764	**2.5** 0.10	**2.5** 0.10	**300.8** 11.84	**356.0** 14.02	–	–	–	**96.4** 212
280ARVSL1783	312RYSL1783	**4.0** 0.16	**4.0** 0.16	**305.2** 12.02	**364.0** 14.33	–	–	–	**81.9** 180
280ARYSL1782	308RYSL1782	**2.5** 0.10	**3.5** 0.14	**301.8** 11.88	**364.0** 14.33	**9.0** 0.35	**4.5** 0.18	6	**101** 222
290ARYSL1881	328RYSL1881	**3.0** 0.12	**3.0** 0.12	**321.3** 12.65	**404.0** 15.91	–	–	–	**170** 373
300ARXS1845B	332RXS1846	**3.5** 0.14	**7.0x20°** 0.28x20°	**325.1** 12.80	**392.0** 15.43	**18.0** 0.71	**9.0** 0.35	8	**131** 287
300ARXSL1845	332RXSL1845	**3.5** 0.14	**7.0x20°** 0.28x20°	**326.1** 12.84	**392.0** 15.43	**12.0** 0.47	**6.0** 0.24	8	**132** 290
300ARXSL1845W217	332RXSL1845	**3.5** 0.14	**7.0x20°** 0.28x20°	**326.1** 12.84	**392.0** 15.43	**12.0** 0.47	**6.0** 0.24	8	**132** 290
300ARYS2002	354RYS2002	**5.0** 0.20	**5.0** 0.20	**347.4** 13.68	**454.3** 17.89	**18.0** 0.71	**10.0** 0.39	8	**289** 635

[3]Maximum shaft or housing fillet radius that bearing corner will clear.

Continued on next page.

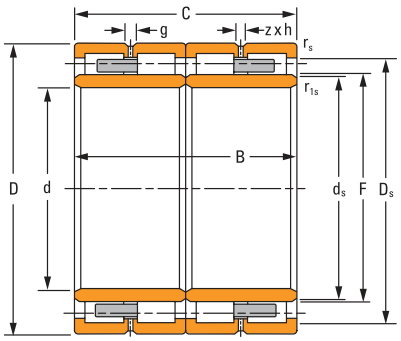

RY-2, RYL-2

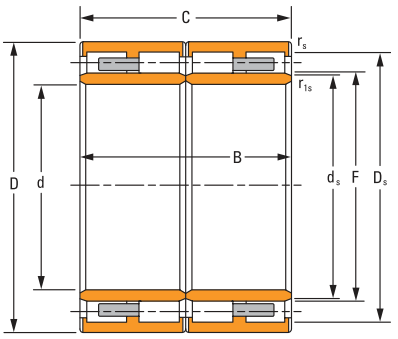

RYL-3

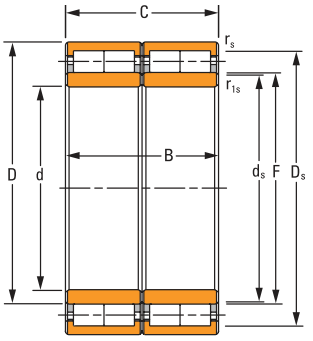

RY-10

TABLE 49. FOUR-ROW CYLINDRICAL ROLLER BEARING PRODUCT DATA *– continued*

Bearing Dimensions					Dynamic Load Rating[2]	Bearing Assembly Part Number	
Bore d	O.D. D	Width B	Width C	DUR[1] F	$C_{1(4)}$	Bearing	Type
mm in.	**mm** in.	**mm** in.	**mm** in.	**mm** in.	**kN** lbf		
320 12.5984	**460** 18.1102	**240** 9.4488	**240** 9.4488	**364** 14.3307	**3860** 870000	D-3716-A	RY-10
330 12.9921	**460** 18.1102	**340** 13.3858	**340** 13.3858	**365** 14.3701	**4980** 1120000	330RX1922	RX-1
340 13.3858	**480** 18.8976	**310** 12.2047	**310** 12.2047	**378** 14.8819	**4660** 1048000	340RX1965A	RX-5
340 13.3858	**480** 18.8976	**350** 13.7795	**350** 13.7795	**378** 14.8819	**5180** 1162000	340RYL1963	RYL-2
360 14.1732	**500** 19.6850	**250** 9.8425	**250** 9.8425	**394** 15.1518	**3900** 878000	360RYL2004	RYL- 3
370 14.5669	**520** 20.4724	**380** 14.9606	**380** 14.9606	**409** 16.1024	**6500** 1460000	370RX2045	RX-1
380 14.9606	**540** 21.2598	**300** 11.8110	**300** 11.8110	**421** 16.5748	**5420** 1218000	380RX2089	RX-1
380 14.9606	**540** 21.2598	**400** 15.7480	**380** 14.9606	**422** 16.6142	**6840** 1536000	380RX2086A	RX-6
380 14.9606	**540** 21.2598	**400** 15.7480	**400** 15.7480	**422** 16.6142	**6900** 1552000	380RX2087	RX-1
390 15.3543	**540** 21.2598	**320** 12.5984	**320** 12.5984	**431** 16.9685	**5540** 1248000	390RX2088	RX-1
390 15.3543	**550** 21.6535	**400** 15.7480	**400** 15.7480	**432.204** 17.0159	**6680** 1500000	390RY2103	RY-2
400 15.7480	**560** 22.0472	**410** 16.1417	**410** 16.1417	**445** 17.5197	**7460** 1676000	400RX2123	RX-1
431.5 16.9882	**571.5** 22.5000	**300** 11.8110	**300** 11.8110	**465** 18.3071	**5200** 1170000	431RX2141	RX-1
440 17.3228	**620** 24.4094	**450** 17.7165	**450** 17.7165	**487** 19.1732	**9100** 2040000	440RX2245	RX-1
460 18.1102	**620** 24.4094	**425** 16.7323	**400** 15.7480	**504** 19.8425	**7580** 1702000	460RX2247A	RX-6

[1]DUR–Diameter Under Rollers.
[2]Based on 1 x 10^6 revolutions L_{10} life, for the ISO life calculation method.

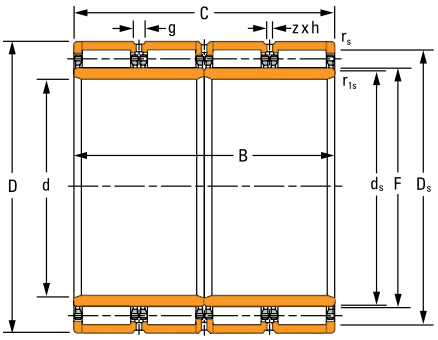

RX-1, RX-9, RX-11

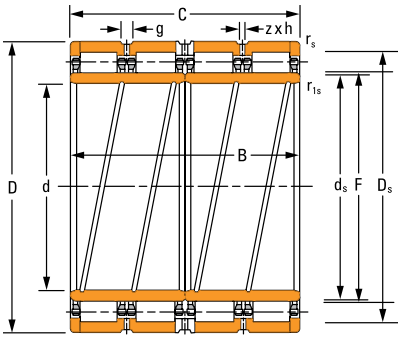

RX-5

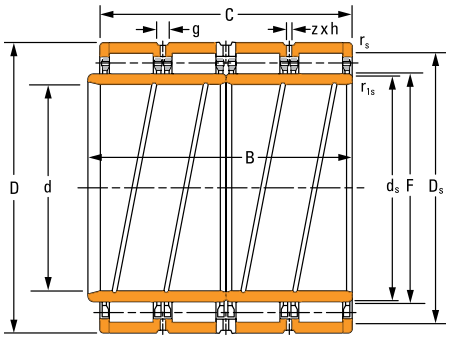

RX-6

Sub Assembly Part Number		Mounting Dimensions				Lubrication Data			Weight
		Fillet Radius		Backing Diameter					
		Maximum		Shaft	Housing	Groove	Hole Diameter	No. of Holes	
Inner Ring	Outer Assembly	r_s (3)	r_{1s} (3)	d_s	D_s	g	h	z	
		mm in.	**mm** in.	**mm** in.	**mm** in.	**mm** in.	**mm** in.		**kg** lbs.
D-3717-A	D-3718-A	**2.5** 0.10	**2.5** 0.10	**358.3** 14.11	**432.0** 17.01	–	–	–	**134** 296
330ARXS1922	365RXS1922	**2.3** 0.09	**10.5x20°** 0.41x20°	**357.1** 14.06	**429.0** 16.89	**12.0** 0.47	**6.0** 0.24	8	**176** 388
340ARXS1965A	378RXS1965A	**3.0** 0.12	**7.0x20°** 0.28x20°	**370.1** 14.57	**446.0** 17.56	**16.0** 0.63	**7.5** 0.30	12	**179** 394
340ARYSL1963	378RYSL1963	**3.0** 0.12	**8.0x20°** 0.32x20°	**370.6** 14.59	**446.0** 17.56	**12.3** 0.48	**6.0** 0.24	8	**201** 443
360ARYSL2004	394RYSL2004	**2.5** 0.10	**2.5** 0.10	**387.3** 15.25	**466.0** 18.35	–	–	–	**148** 326
370ARXS2045	409RXS2045	**1.5** 0.06	**10.0x20°** 0.39x20°	**401.0** 15.79	**485.0** 19.09	**16.0** 0.63	**7.5** 0.30	10	**257** 565
380ARXS2089	421RXS2089	**2.0** 0.08	**10.0x20°** 0.39x20°	**413.0** 16.26	**505.0** 19.88	**12.3** 0.48	**6.0** 0.24	16	**222** 489
380ARXS2086A	422RXS2086	**4.0** 0.16	**7.0x20°** 0.28x20°	**414.0** 16.30	**504.0** 19.84	**16.0** 0.63	**7.5** 0.30	8	**288** 634
380ARXS2087	422RXS2087	**2.0** 0.08	**10.0x20°** 0.39x20°	**412.8** 16.25	**502.0** 19.76	**16.0** 0.63	**8.0** 0.31	8	**298** 655
390ARXS2088	431RXS2088	**2.0** 0.08	**10.0x20°** 0.39x20°	**422.4** 16.63	**509.0** 20.04	**15.0** 0.59	**7.5** 0.30	16	**224** 492
390ARYS2103	432RYS2103	**4.0** 0.16	**11.0x20°** 0.43x20°	**423.1** 16.66	**512.2** 20.17	**16.0** 0.63	**8.0** 0.31	10	**305** 670
400ARXS2123	445RXS2123	**4.0** 0.16	**12.0x20°** 0.47x20°	**436.0** 17.17	**525.0** 20.67	**16.0** 0.63	**7.5** 0.30	10	**320** 704
431ARXS2141	465RXS2141	**4.0** 0.16	**10.5x20°** 0.41x20°	**456.4** 17.97	**545.0** 21.46	**18.0** 0.71	**9.0** 0.35	8	**197** 435
440ARXS2245	487RXS2245	**4.0** 0.16	**12.0x20°** 0.47x20°	**477.4** 18.80	**577.0** 22.72	**16.0** 0.63	**7.5** 0.30	8	**439** 965
460ARXS2247A	504RXS2247	**4.1** 0.16	**12.5x20°** 0.49x20°	**493.3** 19.46	**584.0** 22.99	**19.3** 0.76	**9.5** 0.37	8	**350** 769

(3)Maximum shaft or housing fillet radius that bearing corner will clear.

Continued on next page.

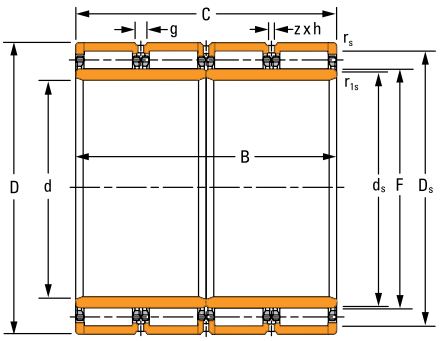

RX-1, RX-9

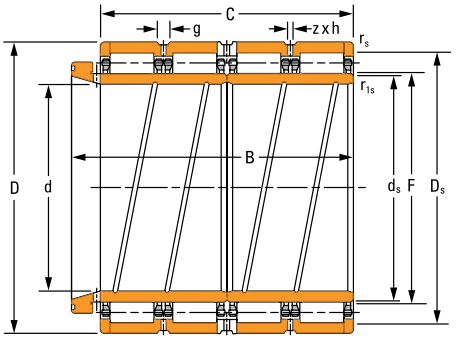

RX-4

TABLE 49. FOUR-ROW CYLINDRICAL ROLLER BEARING PRODUCT DATA *– continued*

Bearing Dimensions					Dynamic Load Rating[2]	Bearing Assembly Part Number	
Bore d	O.D. D	Width B	Width C	DUR[1] F	$C_{1(4)}$	Bearing	Type
mm in.	**mm** in.	**mm** in.	**mm** in.	**mm** in.	**kN** lbf		
480 18.8976	**650** 25.5906	**450** 17.7165	**450** 17.7165	**525** 20.6693	**9540** 2140000	480RX2303B	RX-1
500 19.6850	**670** 26.3780	**485** 19.0945	**450** 17.7165	**540** 21.2598	**9520** 2140000	500RX2345A	RX-4
500 19.6850	**710** 27.9528	**480** 18.8976	**480** 18.8976	**558** 21.9685	**10780** 2420000	500RX2422	RX-1
500 19.6850	**720** 28.3465	**530** 20.8661	**530** 20.8661	**568** 22.3622	**12440** 2800000	500RX2443	RX-1
510 20.0787	**680** 26.7717	**500** 19.6850	**500** 19.6850	**560** 22.0472	**10280** 2320000	510RX2364	RX-1
530 20.8661	**760** 29.9213	**520** 20.4724	**520** 20.4724	**587** 23.1102	**13080** 2940000	530RX2522	RX-1
550 21.6535	**740** 29.1339	**510** 20.0787	**510** 20.0787	**600** 23.6220	**11780** 2640000	550RX2484	RX-1
560 22.0472	**820** 32.2835	**600** 23.6220	**600** 23.6220	**625** 24.6063	**16180** 3640000	560RX2644	RX-1
571.1 22.4843	**812.97** 32.0067	**594** 23.3858	**594** 23.3858	**636** 25.0394	**15440** 3480000	571RX2622	RX-1
600 23.6220	**820** 32.2835	**575** 22.6378	**575** 22.6378	**660** 25.9843	**14780** 3320000	600RX2643A	RX-1
600 23.6220	**820** 32.2835	**575** 22.6378	**575** 22.6378	**660** 25.9843	**14780** 3320000	600RX2643B	RX-9
600 23.6220	**870** 34.2520	**640** 25.1969	**640** 25.1969	**672** 26.4567	**18040** 4060000	600RX2744	RX-1
650 25.5906	**900** 35.4331	**650** 25.5906	**650** 25.5906	**704** 27.7165	**18980** 4260000	650RX2803A	RX-1
650 25.5906	**920** 36.2205	**670** 26.3780	**670** 26.3780	**723** 28.4646	**19520** 4380000	650RX2841C	RX-1
690 27.1654	**980** 38.5827	**715** 28.1496	**715** 28.1496	**767.5** 30.2165	**22400** 5040000	690RX2965	RX-1

[1]DUR–Diameter Under Rollers.
[2]Based on 1 x 10^6 revolutions L_{10} life, for the ISO life calculation method.

Sub Assembly Part Number		Mounting Dimensions				Lubrication Data			Weight
		Fillet Radius		Backing Diameter		Groove	Hole Diameter	No. of Holes	
		Maximum		Shaft	Housing				
Inner Ring	Outer Assembly	r_s [3]	r_{1s} [3]	d_s	D_s	g	h	z	
		mm in.	**mm** in.	**mm** in.	**mm** in.	**mm** in.	**mm** in.		**kg** lbs.
480ARXS2303B	525RXS2303	**5.0** 0.20	**12.7x20°** 0.50x20°	**514.5** 20.26	**615.0** 24.21	**18.0** 0.71	**9.0** 0.35	12	**433** 953
500ARXS2345	540RXS2345	**5.0** 0.20	**12.5x20°** 0.49x20°	**531.0** 20.91	**630.0** 24.80	**19.3** 0.76	**9.5** 0.37	12	**458** 1007
500ARXS2422	558RXS2422	**6.0** 0.24	**18.0x20°** 0.71x20°	**545.7** 21.48	**662.0** 26.06	**22.0** 0.87	**12.0** 0.47	12	**617** 1358
500ARXS2443	568RXS2443	**5.0** 0.20	**13.0x20°** 0.51x20°	**556.6** 21.91	**672.0** 26.46	**22.0** 0.87	**12.0** 0.47	16	**737** 1622
510ARXS2364	560RXS2364	**5.0** 0.20	**14.0x20°** 0.551x20°	**549.7** 21.64	**644.0** 25.35	**19.3** 0.76	**9.5** 0.37	12	**515** 1132
530ARXS2522	587RXS2522	**5.0** 0.20	**12.0x20°** 0.47x20°	**576.0** 22.68	**707.0** 27.83	**19.3** 0.76	**9.5** 0.37	12	**787** 1732
550ARXS2484	600RXS2484	**2.0** 0.08	**15.0x20°** 0.59x20°	**588.5** 23.17	**698.0** 27.48	**22.0** 0.87	**12.0** 0.47	16	**632** 1390
560ARXS2644	625RXS2644	**6.0** 0.24	**20.0x20°** 0.79x20°	**611.4** 24.07	**761.0** 29.96	**25.3** 1.00	**13.0** 0.51	16	**1095** 2410
571ARXS2622	636RXS2622	**5.0** 0.20	**14.0x20°** 0.55x20°	**623.3** 24.54	**758.0** 29.84	**25.3** 1.00	**13.0** 0.51	16	**1009** 2220
600ARXS2643	660RXS2643A	**3.0** 0.12	**15.0x20°** 0.59x20°	**648.3** 25.52	**770.0** 30.31	**22.0** 0.87	**12.0** 0.47	16	**925** 2035
600ARXS2643	660RXS2643B	**3.0** 0.12	**15.0x20°** 0.59x20°	**648.3** 25.52	**770.0** 30.31	**32.0** 1.26	**2x1.7** 2x0.07	8	**924** 2032
600ARXS2744	672RXS2744	**7.5** 0.30	**20.0x20°** 0.79x20°	**658.3** 25.92	**808.0** 31.81	**19.3** 0.76	**9.5** 0.37	16	**1312** 2892
650ARXS2803	704RXS2803	**7.5** 0.30	**20.0x20°** 0.79x20°	**686.9** 27.04	**850.0** 33.46	**22.0** 0.87	**12.0** 0.47	16	**1245** 2739
650ARXS2841	723RXS2841	**4.0** 0.16	**18.0x20°** 0.71x20°	**705.9** 27.79	**859.0** 33.82	**25.3** 1.00	**13.0** 0.51	16	**1458** 3208
690ARXS2965	768RXS2965	**4.0** 0.16	**20.0x20°** 0.79x20°	**750.4** 29.54	**911.5** 35.89	**25.3** 1.00	**13.0** 0.51	16	**1781** 3919

[3]Maximum shaft or housing fillet radius that bearing corner will clear.

Continued on next page.

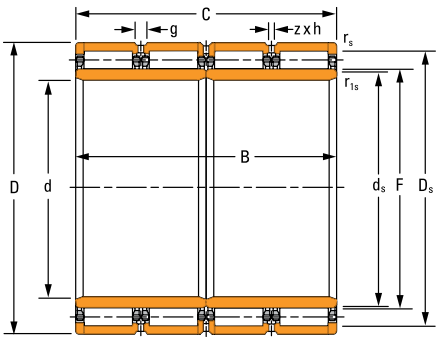

RX-1, RX-9, RX-11

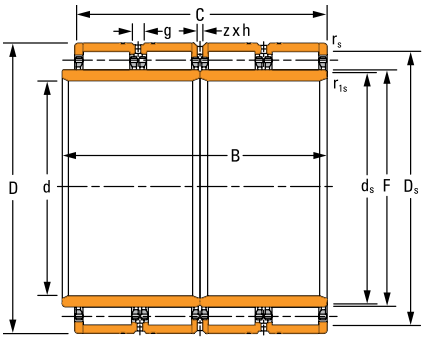

RX-10

TABLE 49. FOUR-ROW CYLINDRICAL ROLLER BEARING PRODUCT DATA *– continued*

Bearing Dimensions					Dynamic Load Rating[2]	Bearing Assembly Part Number	
Bore d	O.D. D	Width B	Width C	DUR[1] F	$C_{1(4)}$	Bearing	Type
mm in.	**mm** in.	**mm** in.	**mm** in.	**mm** in.	**kN** lbf		
690 27.1654	**980** 38.5827	**750** 29.5276	**750** 29.5276	**766** 30.1575	**23000** 5160000	690RX2966	RX-9
700 27.5591	**930** 36.6142	**620** 24.4094	**620** 24.4094	**763** 30.0394	**16920** 380000	700RX2862	RX-1
705 27.7559	**1066.905** 42.0041	**635** 25.0000	**635** 25.0000	**796** 31.3386	**22600** 5100000	705RX3131B	RX-1
710 27.9528	**1000** 39.3701	**715** 28.1496	**715** 28.1496	**787.5** 31.0039	**22800** 5120000	710RX3006	RX-1
730 28.7402	**960** 37.7953	**620** 24.4094	**620** 24.4096	**790** 31.1024	**17500** 3940000	730RX2922	RX-1
730 28.7402	**1030** 40.5512	**750** 29.5276	**750** 29.5276	**809** 31.8504	**24600** 5520000	730RX3064	RX-1
730 28.7402	**1030** 40.5512	**750** 29.5276	**750** 29.5276	**809** 31.8504	**24600** 5520000	730RX3064A	RX-11
750 29.5276	**1000** 39.3701	**670** 26.3780	**670** 26.3780	**813** 32.0079	**20400** 4580000	750RX3005	RX-1
760 29.9213	**1080** 42.5197	**790** 31.1024	**790** 31.1024	**846** 33.3071	**26800** 6040000	760RX3166	RX-1
760.925 29.9577	**1080** 42.5039	**787.4** 31.0000	**787.4** 31.0000	**846** 33.3071	**26800** 6040000	761RX3166B	RX-1
761.425 29.9774	**1079.6** 42.5039	**787.4** 31.0000	**787.4** 31.0000	**846** 33.3071	**26800** 6040000	761RX3166	RX-1
770 30.3150	**1075** 42.3228	**770** 30.3150	**770** 30.3150	**847** 33.3465	**26000** 5860000	770RX3151	RX-1
780 30.7087	**1070** 42.1260	**780** 30.7087	**780** 30.7087	**853** 33.5827	**25400** 5720000	780RX3141	RX-1
800 31.4961	**1080** 42.5197	**700** 27.5591	**700** 27.5591	**878** 34.5669	**22600** 5100000	800RX3165	RX-1
820 32.2835	**1100** 43.3071	**745** 29.3307	**720** 28.3465	**892** 35.1181	**23000** 5180000	820RX3201A	RX-10

[1]DUR–Diameter Under Rollers.
[2]Based on 1 x 10^6 revolutions L_{10} life, for the ISO life calculation method.

Sub Assembly Part Number		Mounting Dimensions				Lubrication Data			Weight
		Fillet Radius		Backing Diameter		Groove	Hole Diameter	No. of Holes	
Inner Ring	Outer Assembly	Maximum		Shaft	Housing				
		r_s [3]	r_{1s} [3]	d_s	D_s	g	h	z	
		mm in.	**mm** in.	**mm** in.	**mm** in.	**mm** in.	**mm** in.		**kg** lbs.
690ARXS2966	766RXS2966	**7.5** 0.30	**20.0x20°** 0.79x20°	**749.6** 29.51	**910.0** 35.83	**46.0** 1.81	**2x1.7** 2x0.07	12	**1854** 4079
700ARXS2862	763RXS2862	**3.0** 0.12	**18.0x20°** 0.71x20°	**745.9** 29.37	**875.0** 34.45	**22.0** 0.87	**12.0** 0.47	16	**1189** 2615
705ARXS3131B	796RXS3131	**6.0** 0.24	**6.0** 0.24	**784.5** 30.89	**986.0** 38.82	**34.0** 1.34	**19.0** 0.75	16	**2082** 4580
710ARXS3006	788RXS3006	**4.0** 0.16	**17.0x20°** 0.67x20°	**773.5** 30.45	**931.5** 36.67	**25.3** 1.00	**13.0** 0.51	16	**1841** 4049
730ARXS2922	790RXS2922	**3.0** 0.12	**20.0x20°** 0.79x20°	**776.3** 30.56	**908.0** 35.75	**22.0** 0.87	**12.0** 0.47	16	**1231** 2707
730ARXS3064	809RXS3064	**6.0** 0.24	**21.0x20°** 0.83x20°	**793.9** 31.26	**959.0** 37.76	**25.3** 1.00	**13.0** 0.51	16	**2050** 4510
730ARXS3064	809RXS3064A	**6.0** 0.24	**21.0x20°** 0.83x20°	**793.9** 31.26	**959.0** 37.76	**25.3** 1.00	**13.0** 0.51	16	**2044** 4496
750ARXS3005	813RXS3005	**3.0** 0.12	**20.0x20°** 0.79x20°	**795.9** 31.33	**943.0** 37.13	**22.0** 0.87	**12.0** 0.47	16	**1509** 3319
760ARXS3166	846RXS3166B	**8.0** 0.31	**19.0x20°** 0.75x20°	**830.5** 32.70	**1006.0** 39.61	**22.0** 0.87	**12.0** 0.47	8	**2423** 5331
761ARXS3166B	846RXS3166A	**8.0** 0.31	**19.0x20°** 0.75x20°	**830.5** 32.70	**1006.0** 39.61	**22.0** 0.87	**12.0** 0.47	8	**2406** 5294
761ARXS3166	846RXS3166	**8.0** 0.31	**19.0x20°** 0.75x20°	**830.5** 32.70	**1006.0** 39.61	**22.0** 0.87	**12.0** 0.47	8	**2403** 5286
770ARXS3151	847RXS3151	**7.5** 0.30	**18.0x20°** 0.71x20°	**831.7** 32.74	**1003.0** 39.49	**25.3** 1.00	**13.0** 0.51	16	**1655** 3649
780ARXS3141	853RXS3141	**6.0** 0.24	**25.0x20°** 0.98x20°	**835.9** 32.91	**1005.0** 39.57	**25.3** 1.00	**13.0** 0.51	16	**2142** 4712
800ARXS3165	878RXS3165	**3.0** 0.12	**20.0x20°** 0.79x20°	**864.3** 34.03	**1014.0** 39.92	**26.0** 1.02	**15.0** 0.59	16	**1916** 4214
820ARXS3201A	892RXS3201A	**3.0** 0.12	**22.0x20°** 0.87x20°	**872.2** 34.34	**1036.0** 40.79	**42.0** 1.65	**2x1.7** 2x0.07	12	**1970** 4334

[3]Maximum shaft or housing fillet radius that bearing corner will clear.

Continued on next page.

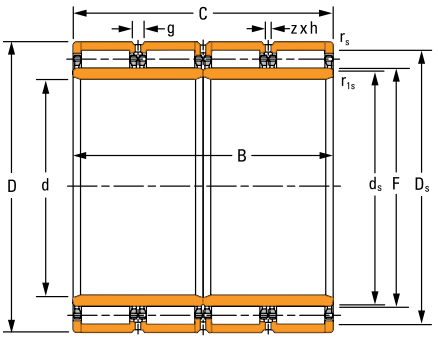

RX-1, RX-9, RX-11

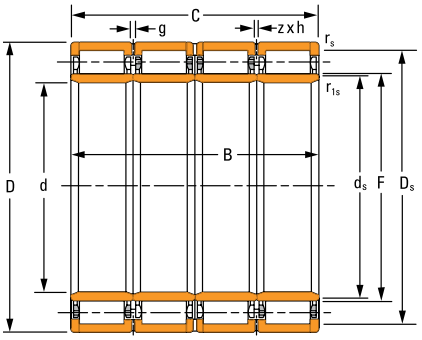

RX-7

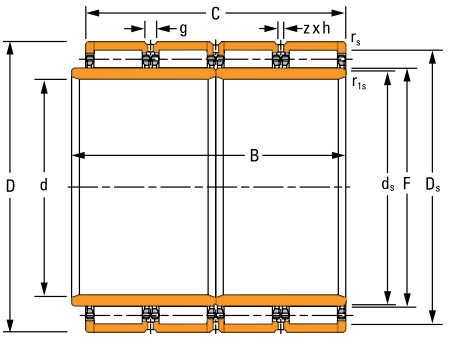

RX-8

TABLE 49. FOUR-ROW CYLINDRICAL ROLLER BEARING PRODUCT DATA *– continued*

Bearing Dimensions					Dynamic Load Rating[2]	Bearing Assembly Part Number	
Bore d	O.D. D	Width B	Width C	DUR[1] F	$C_{1(4)}$	Bearing	Type
mm in.	**mm** in.	**mm** in.	**mm** in.	**mm** in.	**kN** lbf		
820 32.2835	**1130** 44.4882	**800** 31.4961	**800** 31.4961	**903** 35.5512	**27400** 6160000	820RX3264	RX-1
820 32.2835	**1130** 44.4882	**800** 31.4961	**800** 31.4961	**903** 35.5512	**27400** 6160000	820RX3264A	RX-9
820 32.2835	**1130** 44.4882	**825** 32.4803	**800** 31.4961	**903** 35.5512	**27400** 6160000	820RX3264C	RX-8
820 32.2835	**1130** 44.4882	**825** 32.4803	**800** 31.4961	**903** 35.5512	**27400** 6160000	820RX3264D	RX-10
850 33.4646	**1150** 45.2756	**840** 33.0709	**840** 33.0709	**928** 36.5354	**28800** 6480000	850RX3304	RX-1
850 33.4646	**1180** 46.4567	**850** 33.4646	**850** 33.4646	**940** 37.0079	**29600** 6660000	850RX3365	RX-1
862.98 33.9756	**1219.302** 48.0040	**876.3** 34.5000	**889** 35.0000	**956** 37.6378	**34600** 7780000	863RX3445A	RX-1
880 34.6457	**1180** 46.4567	**750** 29.5276	**750** 29.5276	**945.300** 37.2165	**26600** 6000000	880RXK3366	RXK-2
900 35.4331	**1220** 48.0315	**840** 33.0709	**840** 33.0709	**989** 38.9370	**30200** 6780000	900RX3444	RX-1
950 37.4016	**1360** 53.5433	**1000** 39.3701	**1000** 39.3701	**1075** 42.3228	**43200** 9700000	950RX3723	RX-1
1040 40.9449	**1439.890** 56.6886	**1000** 39.3701	**1000** 39.3701	**1133** 44.6063	**42600** 9580000	1040RX3882	RX-7

[1]DUR–Diameter Under Rollers.
[2]Based on 1 x 10^6 revolutions L_{10} life, for the ISO life calculation method.

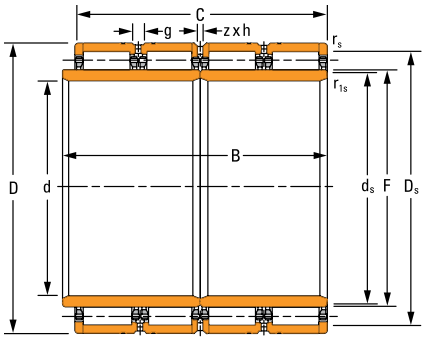

RX-10

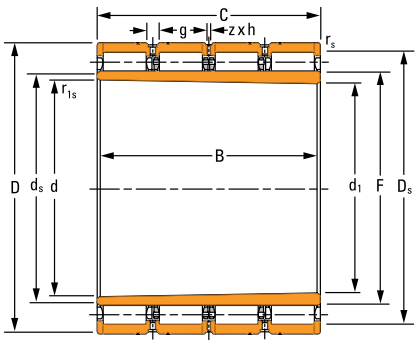

RXK-2

Sub Assembly Part Number		Mounting Dimensions				Lubrication Data			Weight
		Fillet Radius		Backing Diameter					
		Maximum		Shaft	Housing	Groove	Hole Diameter	No. of Holes	
Inner Ring	Outer Assembly	r_s [3]	r_{1s} [3]	d_s	D_s	g	h	z	
		mm in.	**mm** in.	**mm** in.	**mm** in.	**mm** in.	**mm** in.		**kg** lbs.
820ARXS3264	903RXS3264	**7.5** 0.30	**23.0x20°** 0.91x20°	**882.5** 34.74	**1059.0** 41.69	**36.0** 1.42	**20.0** 0.79	16	**2491** 5479
820ARXS3264	903RXS3264A	**7.5** 0.30	**23.0x20°** 0.91x20°	**882.5** 34.74	**1059.0** 41.69	**46.0** 1.81	**2x1.7** 2x0.07	12	**2495** 5498
820ARXS3264C	903RXS3264	**7.5** 0.30	**23.0x20°** 0.91x20°	**882.5** 34.74	**1059.0** 41.69	**36.0** 1.42	**20.0** 0.79	16	**2512** 5527
820ARXS3264C	903RXS3264A	**7.5** 0.30	**23.0x20°** 0.91x20°	**882.5** 34.74	**1059.0** 41.69	**46.0** 1.81	**2x1.7** 2x0.07	12	**2495** 5545
850ARXS3304	928RXS3304	**4.0** 0.16	**23.0x20°** 0.91x20°	**910.8** 35.86	**1080.0** 42.52	**22.0** 0.87	**12.0** 0.47	16	**2605** 5732
850ARXS3365	940RXS3365	**7.5** 0.30	**25.0x11°20'** 0.98x11°20'	**911.7** 35.89	**1106.0** 43.54	**36.0** 1.42	**20.0** 0.79	16	**2870** 6408
863ARXS3445A	956RXS3445A	**5.0** 0.20	**12.0x20°** 0.47x20°	**938.2** 36.94	**1140.0** 44.88	**25.3** 1.00	**13.0** 0.51	16	**3431** 7549
880ARVKS3366	945RXS3366	**7.5** 0.30	**8.0** 0.31	**930.0** 36.61	**1105.0** 43.50	**27.0** 1.06	**15.0** 0.59	20	**2497** 5494
900ARXS3444	989RXS3444	**4.0** 0.16	**24.0x24°** 0.95x20°	**971.8** 38.26	**1149.0** 45.24	**22.0** 0.87	**12.0** 0.47	16	**2959** 6510
950ARXS3723	1075RXS3723	**5.0** 0.20	**22.0x24°** 0.87x20°	**1057.1** 41.62	**1275.0** 50.20	**34.0** 1.34	**19.0** 0.75	16	**4987** 10972
1040ARXS3882	1133RXS3882	**7.5** 0.30	**27.0x20°** 1.06x20°	**1110.2** 43.71	**1353.0** 53.27	**22.0** 0.87	**12.0** 0.47	16	**4976** 10970

[3]Maximum shaft or housing fillet radius that bearing corner will clear.

TAPERED ROLLER BEARINGS

Tapered roller bearings are uniquely designed to manage both thrust and radial loads and are available in single- and multi-row designs with a wide range of assembly options. Our extensive offering of tapered roller bearing combinations offers equipment builders and operators simple, reliable and less costly design solutions.

Please refer to Timken® Tapered Roller Bearing Catalog (order no. 10481) for more information.

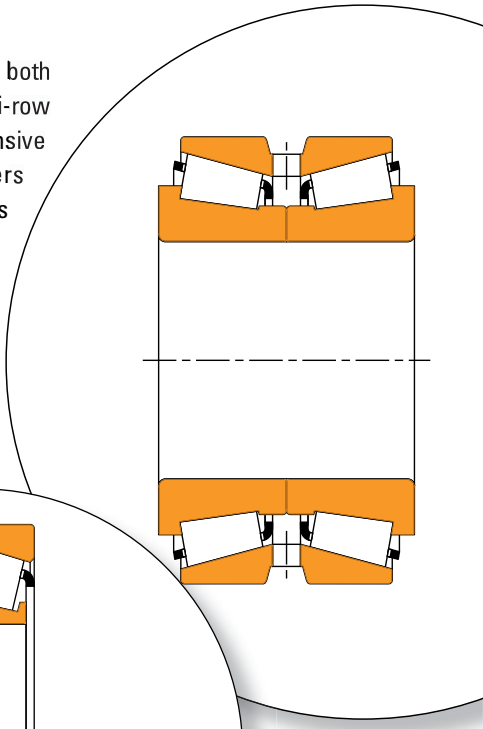

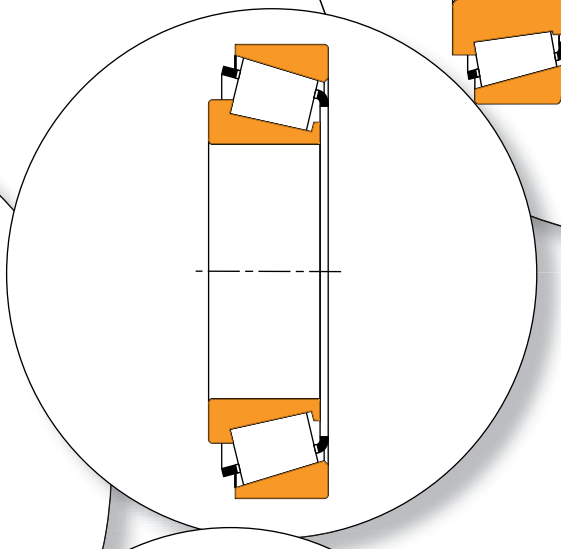

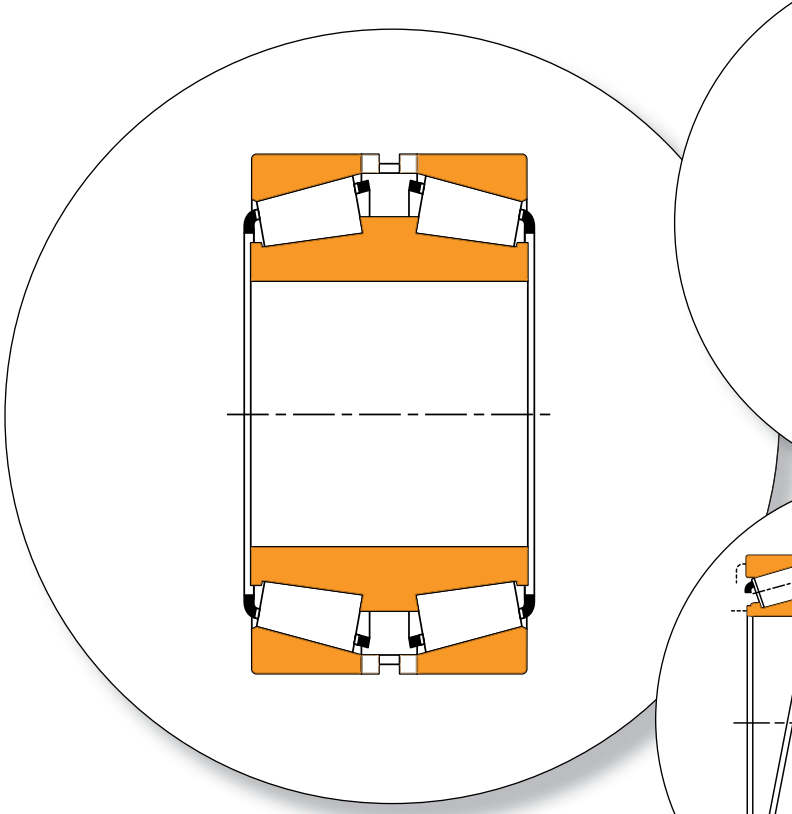

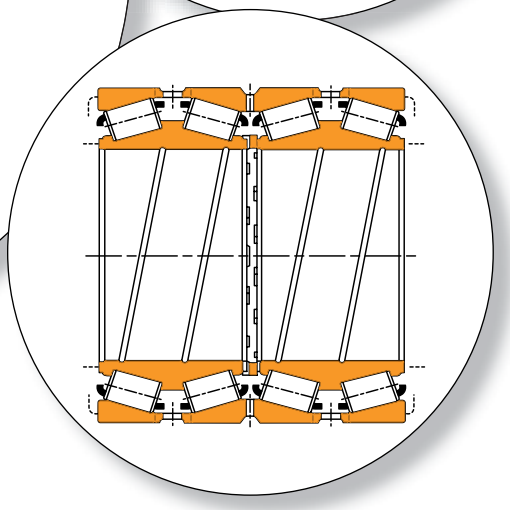

NOMENCLATURE

For detailed nomenclature information, consult Timken® Tapered Roller Bearing Catalog (order no. 10481) as reference.

ABMA INCH PART-NUMBERING SYSTEM

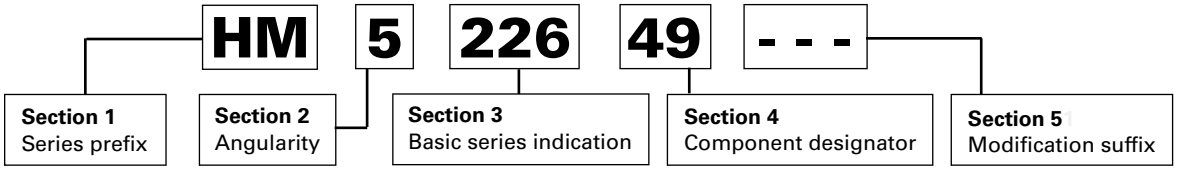

Fig. 41. ABMA inch part-numbering system example.

Section 1 – Series prefix

The series prefix consists of one or two letters that designate the duty class for which the bearing is designed. Additional prefix letters are available in table 52 on page 89.

TABLE 50. COMMON PREFIX LETTERS

Prefix	Class Designation	Prefix	Class Designation
EL	Extra light	HM	Heavy medium
LL	Lighter than light	H	Heavy
L	Light	HH	Heavier than heavy
LM	Light medium	EH	Extra heavy
M	Medium	T	Thrust only

Section 2 – Angularity designator

The first digit following the prefix represents the angle coding as determined by the included angle of the outer ring.

TABLE 51. ANGULARITY DESIGNATOR

Included Outer-Ring Angle	Code	Included Outer-Ring Angle	Code
0° to 23° 59′ 59.99 in.	1	30° 30′ to 32° 29′ 59.99 in.	6
24° to 25° 29′ 59.99 in.	2	32° 30′ to 35° 59′ 59.99 in.	7
25° 30′ to 26° 59′ 59.99 in.	3	36° to 44° 59′ 59.99 in.	8
27° to 28° 29′ 59.99 in.	4	45° and over; excluding thrust	9
28° 30′ to 30° 29′ 59.99 in.	5		

Section 3 – Basic series indication

The two or three digits following the angularity designator are reserved for the basic series indication. Refer to ABMA standard 19.2 for more information.

Section 4 – Component designator

The last two numerical digits indicate the component number.

Section 5 – Modification suffix letters

The suffix may consist of one to three letters in pre-arranged combinations, indicating modifications in external form or internal arrangement. Table 52 on page 89 lists the most common prefix and suffix designations.

METRIC PART- NUMBERING SYSTEM

J-line part numbers

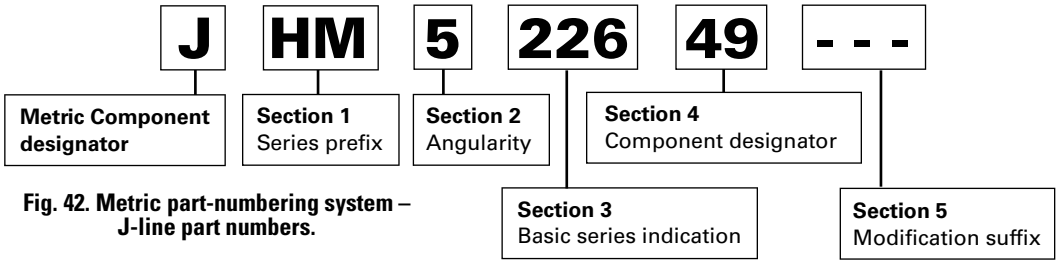

Fig. 42. Metric part-numbering system – J-line part numbers.

TABLE 52. PREFIXES AND SUFFIXES

Prefix	Suffix	Cone or Cup	Explanation
	A	Cup	Different O.D. from basic part number/different radius from basic part number/different width from basic part number.
	C	Cone	Single cone, envelope dimensions same as basic part number, different internal geometry.
	C	Cone & Cup	Two-row ISO bearing assembly with special clearance.
	C	Cup	Dimensionally different from basic part number. (Non-interchangeable.)
	CD	Cup	Double cup with oil holes and groove. One hole counterbored for locking pin.
	D	Cone & Cup	Double cone or double cup. (Non-interchangeable with basic part number.)
	DA	Cone	Double cone. (Non-interchangeable with cones having same basic part number.)
	DB	Cone & Cup	ISO two-row bearing assembly, direct mounting (face-to-face).
	DC	Cup	Double cup with hole for locking pin.
	DE	Cone & Cup	Double cone or double cup having different dimensions or other characteristics from single and double parts identified with same basic part number.
	DF	Cone & Cup	ISO two-row bearing assembly, indirect mounting (back-to-back).
	DGA	Cone	Double cone with pressure removal groove or helical groove in bore. (Non-interchangeable with basic part number.)
	DGW	Cone	Double cone with pressure removal groove or helical groove in bore, and having face slots.
	DW	Cone & Cup	Double cone or double cup with keyway or slot. (Non-interchangeable with cones or cups identified with same basic part numbers.)
	DWA	Cone	Double cone with one end extended and with oil slots in extended end. (Asymmetrical.)
DX		Cone & Cup	DuraSpexx power rating series.
EE		Cone	Large and small ribs - close guided rollers. (Non-interchangeable with other cones identified with same basic part numbers.)
EH		Cone & Cup	Extra heavy series.
	F	Cone	Assembled with polymer cage.
H		Cone & Cup	Heavy series. (Non-interchangeable with other cones and cups identified with same basic part numbers.)
HH		Cone & Cup	Heavy-heavy series. (Non-interchangeable with other cones and cups identified with same basic part numbers.)
HM		Cone & Cup	Heavy-medium series. (Non-interchangeable with other cones cups identified with same basic part numbers.)
J		Cone & Cup	Used alone or with other prefix letters to indicate metric bore and/or O.D.
K		Cup	Double cup with heavy section. May have unusual features such as flange, tapered O.D., etc.
L		Cone & Cup	Light series. (Non-interchangeable with other cones and cups identified with same basic part numbers.)
LM		Cone & Cup	Light-medium series.
M		Cone & Cup	Medium series.
NA	NA	Cone	Two cones mated with double cup to form double-row, non-adjustable bearing. (Non-interchangeable with other cones having same basic part numbers which may vary in bore, O.D., and width dimensions.)
NP		Cone & Cup	Used with random numbers for product differentiation.
	NW	Cone	NA-type cone with slotted front face.
	NWV	Cone	NA-type cone with slotted front face. Made of special steel.
	S	Cone & Cup	Special feature bearing. (Non-interchangable with bearings having same basic part numbers.)
	SA	Cone & Cup	Special feature bearing.
	SB	Cup	Flanged cup.
	SC	Cone	With square bore.
	SC	Cone & Cup	Special feature bearing.
	SW	Cone & Cup	Slot or keyway. (Non-interchangeable with bearings having same basic part numbers.)
T		Race	Thrust bearing assemblies.
T		Cup	Double cup with heavy section. May have unusual feature such as flange, tapered O.D., etc.
	T	Cone & Cup	ISO two-row bearing assembly width, indirect mounting (back-to-back).
	T	Cone	Tapered bore.
	TA	Cone	Tapered bore NA-type cone.
	TD	Cone	Double cone with tapered bore.
	W	Cone & Cup	Slot(s) or keyway(s).
	X	Cone & Cup	Special feature bearing. (Non-interchangable with bearings having the same basic part number.)
	X	Cone & Cup	ISO bearing with same boundary dimensions as basic part number but with different internal geometry, yielding increased rating.
XC		Cone & Cup	Limited production bearings to which standard series part numbers have not been assigned.
	XD	Cup	Double cup, no oil holes or groove.
	XD	Cone	Double cone, different bore or width from basic part numbers.
	XD	Cone	Double cone, oil holes in large rib.

FOUR-ROW TAPERED ROLLER BEARINGS

Engineered for use in rolling mill roll-neck applications with high-radial and axial load capacity. Timken's wide range of four-row tapered roller bearings are used extensively on flat product mills in work rolls, intermediate rolls and backup rolls, as well as in long product work rolls.

TQOW–2TDIW BEARINGS

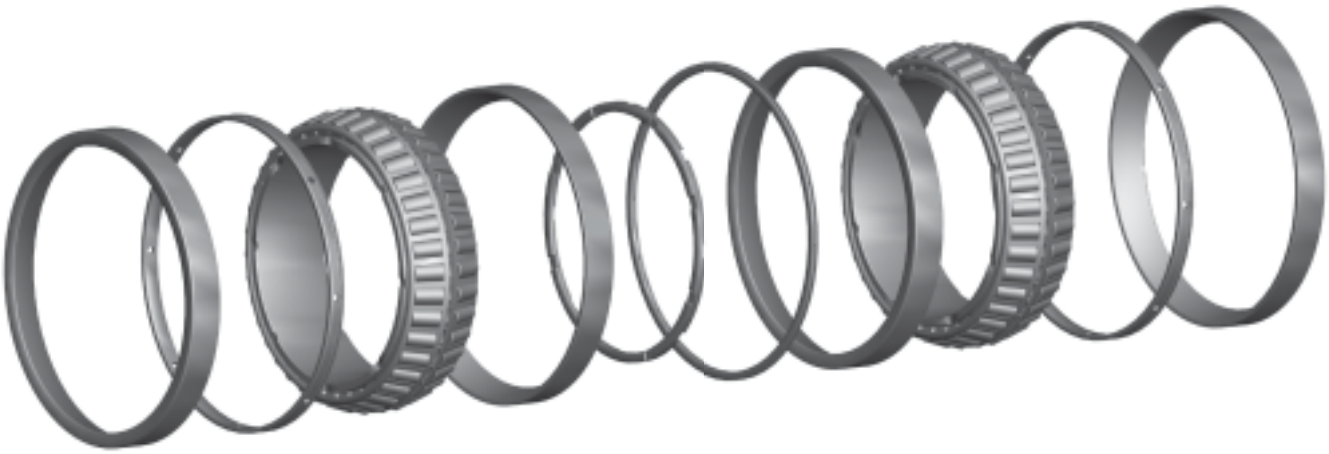

Fig. 43. 2TDIW bearing.

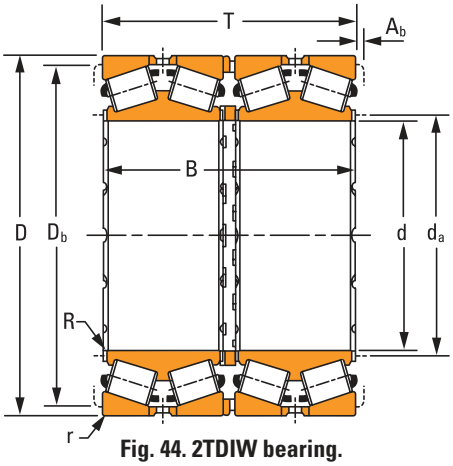

Fig. 44. 2TDIW bearing.

OVERALL DIMENSIONS:

- d – Bore diameter
- D – Outer diameter
- T – Width over cups
- B – Width over cones
- d_a – Cone backing diameter
- R – Max. shaft radius
- r – Max. housing radius
- D_b – Cup backing diameter
- A_b – Axial cage clearance

FOUR-ROW TAPERED ROLLER BEARING DESIGN TYPES TQOW-2TDIW (LOOSE FIT MOUNTING)

TQOW

- Two double cones.
- Two single cups.
- One double cup.
- One cone spacer.
- Two cup spacers.
- TQO – cones without face slots.
- TQOG – spiral groove on cone bore.
- TQOW – cone face slots.
- TQOGW – spiral groove on cone bore and cone face slots.
- TQOGWE – two double cones with extended ribs, spiral groove on cone bores and cone face slots.

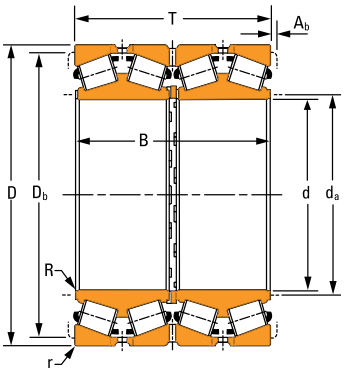

TQO

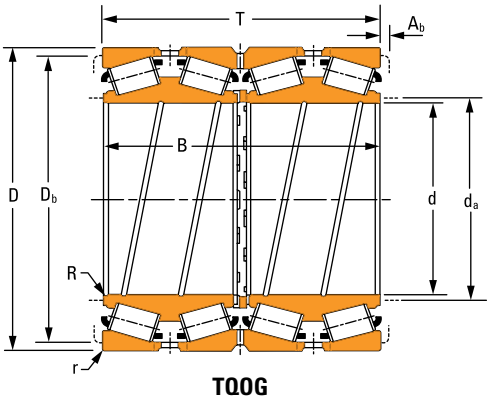

TQOG

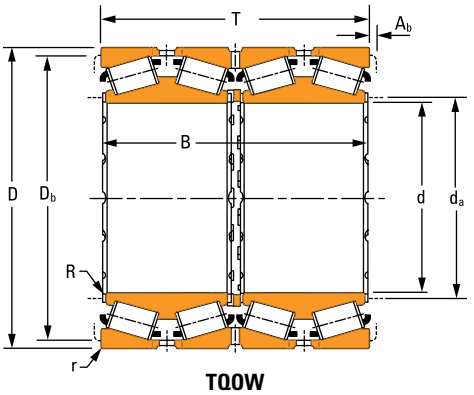

TQOW

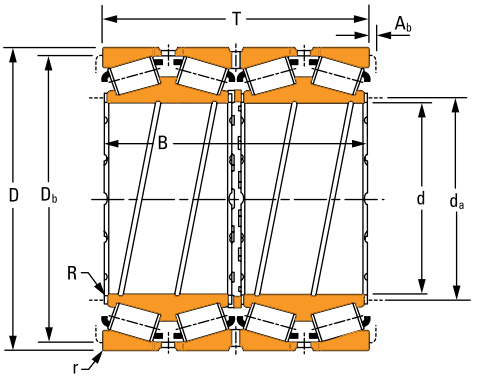

TQOGW

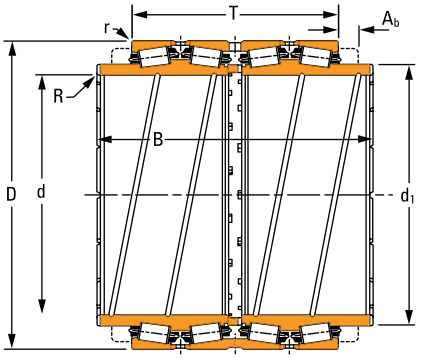

TQOGWE

2TDIW

- Two double cones.
- Four single cups.
- One or no cone spacer.
- Two or three cup spacers.
- 2TDI – cone without face slots.
- 2TDIW – cone face slots.
- 2TDIGW – spiral groove on cone bore and cone face slots.
- 2TDIGWE – two double cones with extended ribs, spiral groove on cone bores and cone face slots.

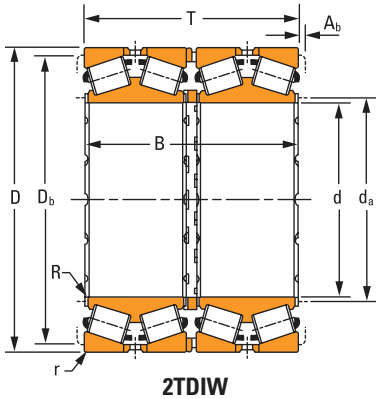

2TDIW

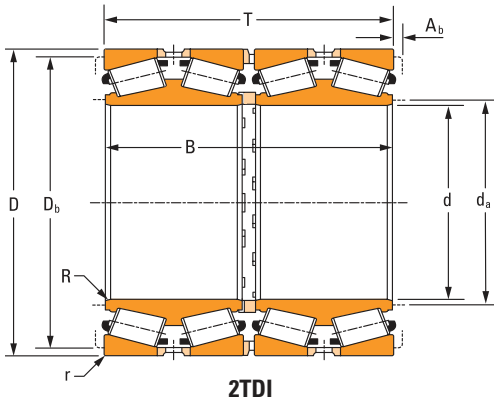

2TDI

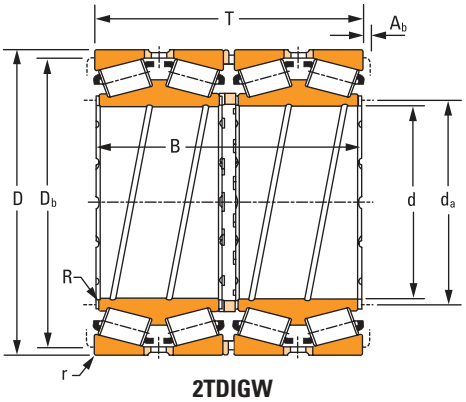

2TDIGW

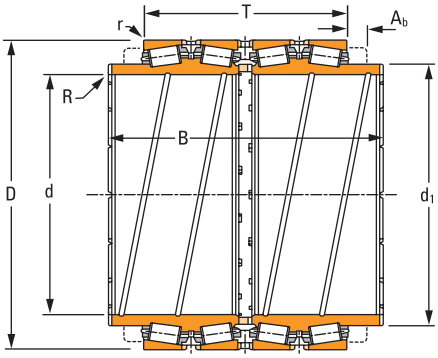

2TDIGWE

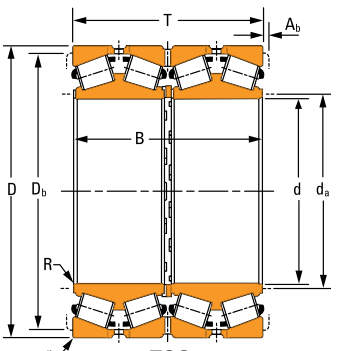

TQO

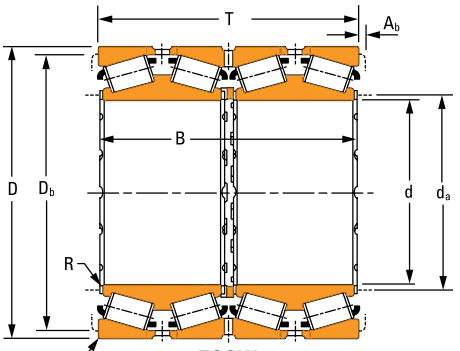

TQOW

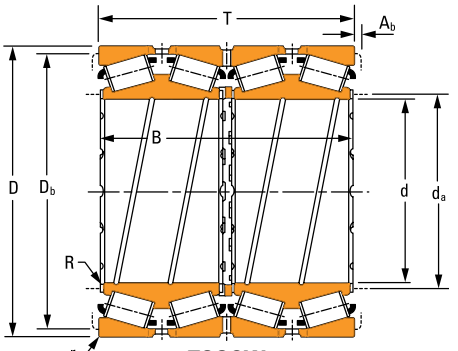

TQOGW

TABLE 53. TQOW – 2TDIW PRODUCT DATA

Bearing Dimensions				Load Ratings							
				One Million Revolutions				90 Million Revolutions			
Bore d	O.D. D	Width over Cups T	Width over Cones B	Dynamic Radial $C_{1(4)}$	e	Y_1	Y_2	Dynamic Radial C_{90}	Dynamic Axial C_{a90}	Dynamic Radial $C_{90(4)}$	K Factor
mm in.	**mm** in.	**mm** in.	**mm** in.	**kN** lbf				**kN** lbf	**kN** lbf	**kN** lbf	
127.000 5.0000	**182.562** 7.1875	**158.750** 6.2500	**158.750** 6.2500	**932** 210000	0.31	2.20	3.28	**69.4** 15600	**36.3** 8160	**242** 54400	1.91
130.175 5.1250	**196.850** 7.7500	**200.025** 7.8750	**200.025** 7.8750	**1280** 288000	0.34	1.96	2.92	**95.3** 21400	**56.1** 12600	**332** 74600	1.70
136.525 5.3750	**190.500** 7.5000	**161.925** 6.3750	**161.925** 6.3750	**984** 222000	0.32	2.10	3.13	**73.3** 16500	**40.3** 9060	**256** 57400	1.82
139.700 5.5000	**200.025** 7.8750	**160.340** 6.3126	**157.165** 6.1876	**998** 224000	0.34	2.01	2.99	**74.3** 16700	**42.8** 9610	**258** 58200	1.74
139.700 5.5000	**222.250** 8.7500	**127.000** 5.0000	**120.396** 4.7400	**1020** 230000	0.44	1.55	2.30	**75.9** 17100	**56.8** 12800	**264** 59400	1.34
150 5.9055	**210** 8.2677	**190** 7.4803	**190** 7.4803	**986** 222000	0.35	1.94	2.89	**73.4** 16500	**43.7** 9810	**256** 57400	1.68
152.400 6.0000	**222.250** 8.7500	**174.625** 6.8750	**174.625** 6.8750	**1312** 294000	0.33	2.03	3.03	**97.6** 21900	**55.6** 12500	**340** 76400	1.76
152.400 6.0000	**244.475** 9.6250	**187.325** 7.3750	**192.088** 7.5625	**1398** 314000	0.35	1.92	2.85	**104** 23400	**62.7** 14100	**362** 81600	1.66
152.400 6.0000	**298.450** 11.7500	**228.600** 9.0000	**231.775** 9.1250	**2400** 540000	0.33	2.03	3.03	**179** 40200	**102** 22900	**624** 140200	1.76
165.100 6.5000	**225.425** 8.8750	**168.276** 6.6250	**165.100** 6.5000	**1056** 238000	0.38	1.75	2.61	**78.6** 17700	**51.6** 11600	**274** 61600	1.52
177.800 7.0000	**247.650** 9.7500	**192.088** 7.5625	**192.088** 7.5625	**1332** 300000	0.44	1.53	2.29	**99.2** 22300	**74.6** 16800	**346** 77600	1.33
177.800 7.0000	**273.050** 10.7500	**234.947** 9.2499	**234.950** 9.2500	**1968** 442000	0.53	1.28	1.91	**147** 33000	**132** 29600	**510** 114800	1.11
177.800 7.0000	**285.750** 11.2500	**222.245** 8.7498	**222.250** 8.7500	**1706** 384000	0.43	1.56	2.32	**127** 28600	**94.2** 21200	**442** 99400	1.35
177.800 7.0000	**288.925** 11.3750	**263.525** 10.3750	**263.525** 10.3750	**2300** 516000	0.47	1.44	2.15	**171** 38500	**137** 30800	**596** 134000	1.25
177.800 7.0000	**288.925** 11.3750	**266.700** 10.5000	**266.700** 10.5000	**2860** 644000	0.32	2.11	3.15	**214** 48000	**117** 26200	**744** 167200	1.83

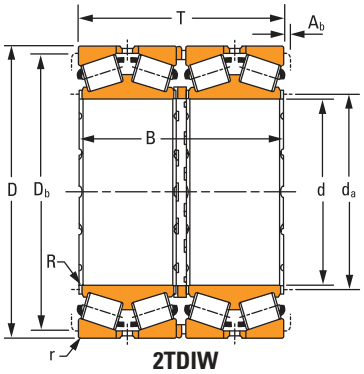

2TDIW

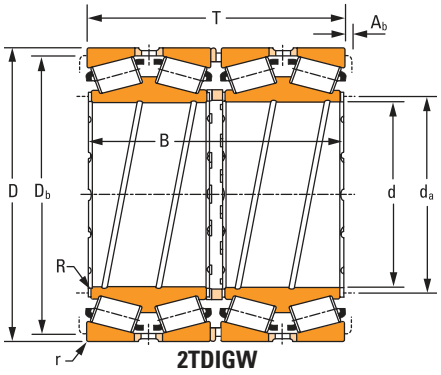

2TDIGW

Bearing Part No.			Design Type	Cage Type[1]	Mounting Dimensions					Weight
Double Cone	Single Cup	Double Cup			Max. Shaft Radius R	Cone Backing Diameter d_a	Max. Housing Radius r	Cup Backing Diameter D_b	Axial Cage Clearance A_b	
					mm in.	**mm** in.	**mm** in.	**mm** in.	**mm** in.	**kg** lbs.
48290DW	48220	48220D	TQOW	S	**1.5** 0.06	**137.0** 5.39	**3.3** 0.13	**168.0** 6.61	**2.3** 0.09	**14.0** 31.0
67391DW	67322	67323D	TQOW	S	**1.5** 0.06	**142.0** 5.59	**3.3** 0.13	**180.0** 7.09	**0.0** 0.00	**21.0** 47.0
48393D	48320	48320D	TQO	S	**1.5** 0.06	**144.0** 5.67	**3.3** 0.13	**177.0** 6.97	**2.0** 0.08	**14.0** 31.0
48680DGW	48620	48620D	TQOGW	S	**0.8** 0.03	**150.0** 5.91	**3.3** 0.13	**185.0** 7.28	**4.6** 0.18	**17.0** 37.0
73550D	73875	73876CD	TQO	S	**3.5** 0.14	**156.0** 6.14	**3.3** 0.13	**204.0** 8.03	**4.5** 0.18	**16.0** 36.0
NP965846	NP711787	–	2TDIW	S	**1.5** 0.06	**158.0** 6.22	**2.0** 0.08	**193.0** 7.60	**1.5** 0.06	**19.0** 43.0
M231649D	M231610	M231610CD	TQO	S	**1.5** 0.06	**164.5** 6.48	**1.5** 0.06	**207.0** 8.15	**2.3** 0.09	**23.0** 50.0
81601D	81962	81963CD	TQO	S	**1.5** 0.06	**166.1** 6.54	**3.3** 0.13	**225.0** 8.86	**3.2** 0.13	**31.0** 69.0
EE517060D	517117	517118XD	TQO	S	**3.3** 0.13	**175.0** 6.89	**3.3** 0.13	**272.0** 10.71	**4.1** 0.16	**71.0** 157
46791DW	46720	46721D	TQOW	S	**0.8** 0.03	**175.0** 6.89	**3.3** 0.13	**209.0** 8.23	**8.1** 0.32	**20.0** 43.0
67791DGW	67720	–	2TDIGW	S	**1.5** 0.06	**190.0** 7.48	**3.3** 0.13	**229.0** 9.02	**2.8** 0.11	**27.0** 59.0
82681DGW	82622	82622D	TQOGW	S	**1.5** 0.06	**195.0** 7.68	**3.3** 0.13	**249.0** 9.80	**3.9** 0.15	**48.0** 106
EE91700D	91112	91113XD	TQO	S	**1.5** 0.06	**190.0** 7.48	**3.3** 0.13	**261.0** 10.28	**1.3** 0.05	**51.0** 113
94706D	94113	94114CD	TQO	S	**1.5** 0.06	**195.0** 7.68	**3.3** 0.13	**259.0** 10.20	**6.3** 0.25	**63.0** 139
HM237545D	HM237510	HM237511XD	TQO	S	**1.5** 0.06	**194.0** 7.64	**3.3** 0.13	**266.0** 10.47	**2.0** 0.08	**66.0** 145

[1]Cage type: S – Stamped steel, P – Pin type.

Continued on next page.

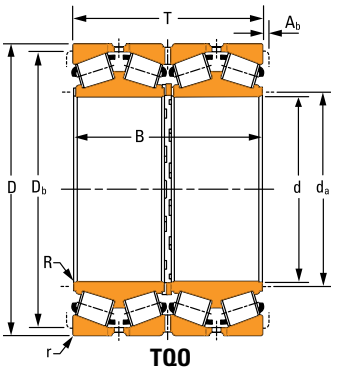

TQO

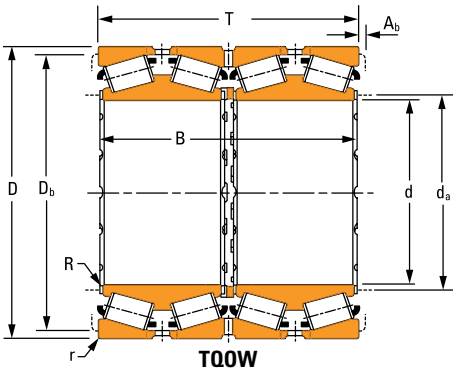

TQOW

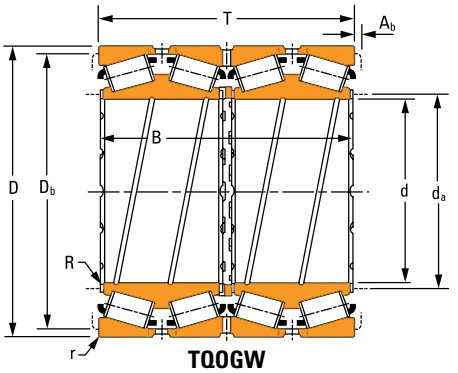

TQOGW

TABLE 53. TQOW – 2TDIW PRODUCT DATA *– continued*

Bearing Dimensions				Load Ratings							
				One Million Revolutions				90 Million Revolutions			
Bore d	O.D. D	Width over Cups T	Width over Cones B	Dynamic Radial $C_{1(4)}$	e	Y_1	Y_2	Dynamic Radial C_{90}	Dynamic Axial C_{a90}	Dynamic Radial $C_{90(4)}$	K Factor
mm in.	**mm** in.	**mm** in.	**mm** in.	**kN** lbf				**kN** lbf	**kN** lbf	**kN** lbf	
177.800 7.0000	**304.800** 12.0000	**233.365** 9.1876	**238.227** 9.3790	**2100** 472000	0.36	1.87	2.79	**156** 35100	**96.4** 21700	**544** 122400	1.62
177.800 7.0000	**330.200** 13.0000	**234.950** 9.2500	**231.775** 9.1250	**2360** 530000	0.38	1.75	2.61	**176** 39500	**116** 26000	**612** 137600	1.52
187.325 7.3750	**269.875** 10.6250	**211.138** 8.3125	**211.138** 8.3125	**1910** 430000	0.33	2.03	3.03	**142** 32000	**80.9** 18200	**494** 111200	1.76
190.500 7.5000	**266.700** 10.5000	**188.914** 7.4375	**187.325** 7.3750	**1450** 326000	0.48	1.41	2.10	**108** 24300	**88.2** 19800	**376** 84600	1.22
190.500 7.5000	**368.300** 14.5000	**387.350** 15.2500	**381.000** 15.0000	**3840** 864000	0.40	1.67	2.49	**286** 64300	**197** 44200	**996** 224000	1.45
198.438 7.8125	**284.162** 11.1875	**225.425** 8.8750	**225.425** 8.8750	**1986** 446000	0.33	2.03	3.03	**148** 33200	**84.2** 18900	**514** 115800	1.76
203.200 8.0000	**317.500** 12.5000	**209.550** 8.2500	**209.550** 8.2500	**1838** 414000	0.31	2.15	3.20	**137** 30800	**73.0** 16500	**476** 107200	1.86
203.200 8.0000	**317.500** 12.5000	**222.247** 8.7499	**223.042** 8.7812	**1890** 424000	0.49	1.38	2.06	**141** 31600	**117** 26300	**490** 110200	1.20
203.200 8.0000	**317.500** 12.5000	**266.700** 10.5000	**266.700** 10.5000	**2540** 572000	0.52	1.29	1.92	**190** 42600	**170** 38200	**660** 148400	1.12
203.200 8.0000	**317.500** 12.5000	**336.550** 13.2500	**336.550** 13.2500	**2540** 572000	0.52	1.29	1.92	**190** 42600	**170** 38200	**660** 148400	1.12
203.352 8.0060	**298.450** 11.7500	**174.628** 6.8751	**174.628** 6.8751	**1492** 336000	0.44	1.52	2.27	**111** 25000	**84.2** 18900	**386** 87000	1.32
206.375 8.1250	**282.575** 11.1250	**190.500** 7.5000	**190.500** 7.5000	**1476** 332000	0.51	1.33	1.98	**110** 24700	**95.8** 21500	**382** 86000	1.15
215.900 8.5000	**355.600** 14.0000	**269.875** 10.6250	**273.050** 10.7500	**2640** 594000	0.59	1.14	1.70	**197** 44200	**199** 44700	**686** 154000	0.99
215.900 8.5000	**288.925** 11.3750	**177.800** 7.0000	**177.800** 7.0000	**1496** 336000	0.48	1.39	2.08	**111** 25000	**91.8** 20600	**388** 87200	1.21
216.103 8.5080	**330.200** 13.0000	**269.875** 10.6250	**263.525** 10.3750	**2380** 536000	0.55	1.22	1.82	**178** 39900	**168** 37700	**618** 139000	1.06

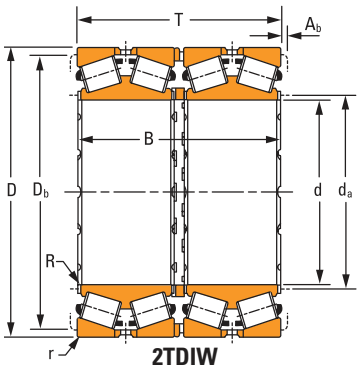

2TDIW

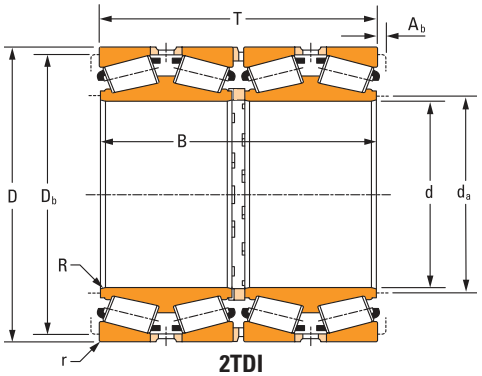

2TDI

Bearing Part No.			Design Type	Cage Type[1]	Mounting Dimensions					Weight
Double Cone	Single Cup	Double Cup			Max. Shaft Radius R	Cone Backing Diameter d_a	Max. Housing Radius r	Cup Backing Diameter D_b	Axial Cage Clearance A_b	
					mm in.	**mm** in.	**mm** in.	**mm** in.	**mm** in.	**kg** lbs.
EE280700D	281200	281201D	TQO	S	**3.3** 0.13	**199.9** 7.87	**3.3** 0.13	**279.0** 10.98	**4.4** 0.17	**67.0** 148
EE210700D	211300	211301XD	TQO	S	**1.5** 0.06	**200.0** 7.87	**3.3** 0.13	**299.0** 11.77	**6.9** 0.27	**89.0** 197
M238849DW	M238810	M238810D	TQOW	S	**1.5** 0.06	**200.0** 7.87	**3.3** 0.13	**250.0** 9.84	**3.0** 0.12	**40.0** 87.0
67885DW	67820	–	2TDIW	S	**1.5** 0.06	**204.0** 8.03	**3.3** 0.13	**246.0** 9.69	**5.2** 0.20	**32.0** 71.0
EE420750D	421450	–	2TDI	S	**3.3** 0.13	**221.0** 8.70	**3.3** 0.13	**331.0** 13.03	**3.6** 0.14	**171** 376
M240648DGW	M240611	M240611D	TQOW	S	**1.5** 0.06	**212.1** 8.35	**3.3** 0.13	**263.9** 10.39	**3.3** 0.13	**46.0** 102
EE132081D	132125	132126D	TQO	S	**3.3** 0.13	**224.0** 8.82	**3.3** 0.13	**293.9** 11.57	**4.3** 0.17	**63.0** 139
93580D	93520	93520XD	TQO	S	**1.5** 0.06	**221.0** 8.70	**3.3** 0.13	**292.0** 11.50	**0.4** 0.02	**63.0** 138
93800DGW	93125	93127CD	TQOGW	S	**1.5** 0.06	**222.0** 8.74	**3.3** 0.13	**286.0** 11.26	**5.3** 0.21	**89.0** 196
93801D	93125	–	2TDI	S	**6.4** 0.25	**226.9** 8.93	**3.3** 0.13	**286.0** 11.26	**7.8** 0.30	**88.0** 195
8976D	8920	8920XD	TQO	S	**1.5** 0.06	**218.0** 8.58	**3.3** 0.13	**277.0** 10.91	**3.8** 0.15	**41.0** 91.0
67986DGW	67920	67921D	TQOGW	S	**0.8** 0.03	**223.0** 8.78	**3.3** 0.13	**260.0** 10.24	**0.0** 0.00	**34.0** 76.0
96851DW	96140	96140CD	TQO	S	**6.4** 0.25	**249.0** 9.80	**3.3** 0.13	**318.0** 12.52	**3.4** 0.13	**105** 231
LM742749DW	LM742714	LM742714D	TQOW	S	**2.3** 0.09	**229.4** 9.03	**3.3** 0.13	**267.0** 10.51	**3.0** 0.12	**33.0** 72.0
9974DW	9920	9920D	TQOW	S	**1.5** 0.06	**235.0** 9.24	**3.3** 0.13	**300.0** 11.81	**3.2** 0.13	**83.0** 182

[1]Cage type: S – Stamped steel, P – Pin type.

Continued on next page.

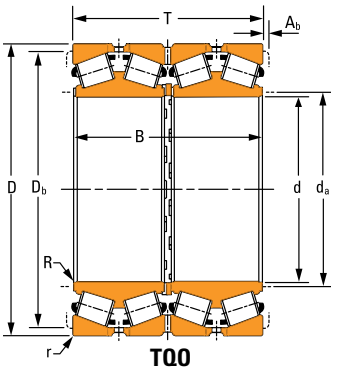

TQO

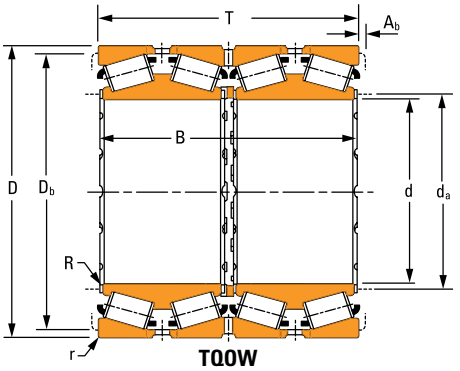

TQOW

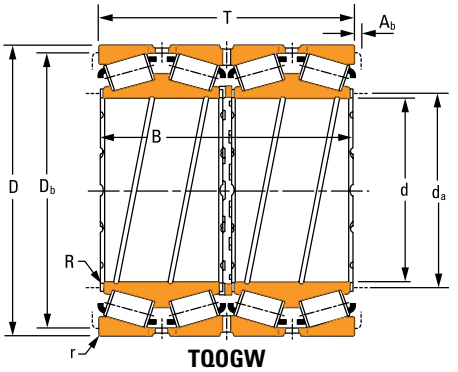

TQOGW

TABLE 53. TQOW – 2TDIW PRODUCT DATA *– continued*

Bearing Dimensions				Load Ratings							
				One Million Revolutions				90 Million Revolutions			
Bore d	O.D. D	Width over Cups T	Width over Cones B	Dynamic Radial $C_{1(4)}$	e	Y_1	Y_2	Dynamic Radial C_{90}	Dynamic Axial C_{a90}	Dynamic Radial $C_{90(4)}$	K Factor
mm in.	**mm** in.	**mm** in.	**mm** in.	**kN** lbf				**kN** lbf	**kN** lbf	**kN** lbf	
220 8.6614	**340** 13.3858	**303.5** 11.9488	**303.5** 11.9488	**3980** 892000	0.43	1.57	2.34	**296** 66500	**218** 48900	**1030** 232000	1.36
220.662 8.6875	**314.325** 12.3750	**239.712** 9.4375	**239.712** 9.4375	**2420** 544000	0.33	2.03	3.03	**180** 40500	**103** 23100	**628** 141000	1.76
228.600 9.0000	**311.150** 12.2500	**200.025** 7.8750	**200.025** 7.8750	**1876** 422000	0.33	2.03	3.03	**140** 31400	**79.5** 17900	**486** 109400	1.76
228.600 9.0000	**355.600** 14.0000	**254.000** 10.0000	**254.000** 10.0000	**2780** 624000	0.33	2.04	3.04	**206** 46400	**117** 26200	**718** 161600	1.77
228.600 9.0000	**400.050** 15.7500	**296.875** 11.6880	**296.875** 11.6880	**3880** 872000	0.31	2.18	3.25	**289** 64900	**153** 34300	**1006** 226000	1.89
228.600 9.0000	**425.450** 16.7500	**361.950** 14.2500	**349.250** 13.7500	**5400** 1216000	0.33	2.03	3.03	**402** 90500	**229** 51500	**1402** 316000	1.76
234.950 9.2500	**327.025** 12.8750	**196.850** 7.7500	**196.850** 7.7500	**1836** 412000	0.41	1.66	2.48	**137** 30700	**95.2** 21400	**476** 107000	1.44
234.950 9.2500	**384.175** 15.1250	**457.995** 18.0313	**457.995** 18.0313	**6180** 1388000	0.33	2.03	3.03	**460** 103000	**262** 58800	**1600** 360000	1.76
240 9.4488	**338** 13.3071	**248** 9.7638	**248** 9.7638	**2840** 636000	0.36	1.87	2.79	**211** 47400	**130** 29200	**734** 165200	1.62
240 9.4488	**360** 14.1732	**308.5** 12.1457	**308.5** 12.1457	**4340** 974000	0.46	1.46	2.18	**323** 72500	**253** 56900	**1124** 252000	1.27
241.478 9.5070	**349.148** 13.7460	**228.600** 9.0000	**228.600** 9.0000	**2300** 516000	0.35	1.90	2.84	**171** 38500	**103** 23300	**596** 134000	1.65
243.975 9.6053	**329.949** 12.9901	**245.999** 9.6850	**245.999** 9.6850	**2260** 510000	0.32	2.10	3.13	**169** 37900	**92.7** 20800	**588** 132000	1.82
244.475 9.6250	**327.025** 12.8750	**193.675** 7.6250	**193.675** 7.6250	**1974** 444000	0.32	2.10	3.13	**147** 33000	**80.8** 18200	**512** 115000	1.82
244.475 9.6250	**381.000** 15.0000	**304.800** 12.0000	**304.800** 12.0000	**3160** 710000	0.52	1.30	1.94	**235** 52900	**208** 46800	**820** 184200	1.13
247.650 9.7500	**406.400** 16.0000	**446.532** 17.5800	**447.878** 17.6330	**6840** 1538000	0.33	2.03	3.03	**509** 115000	**290** 65200	**1774** 398000	1.76

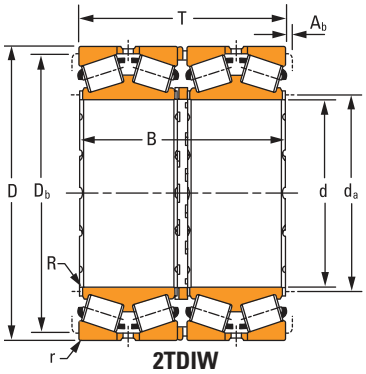

2TDIW

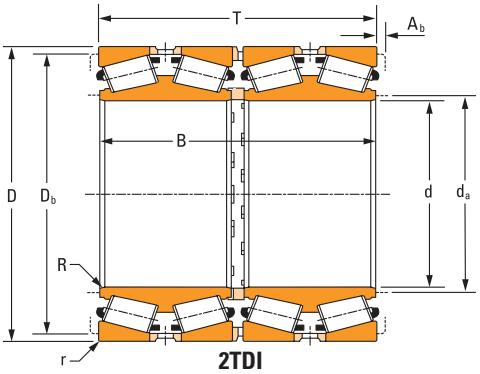

2TDI

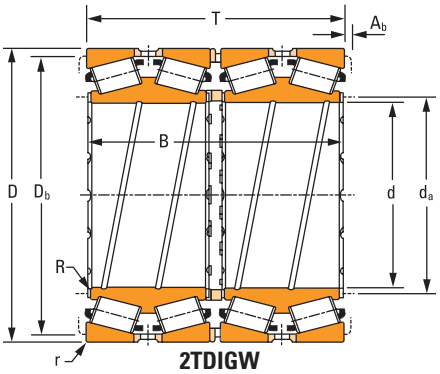

2TDIGW

Bearing Part No.			Design Type	Cage Type[1]	Mounting Dimensions					Weight
Double Cone	Single Cup	Double Cup			Max. Shaft Radius R	Cone Backing Diameter d_a	Max. Housing Radius r	Cup Backing Diameter D_b	Axial Cage Clearance A_b	
					mm in.	**mm** in.	**mm** in.	**mm** in.	**mm** in.	**kg** lbs.
NP881565	NP552013	–	2TDIW	S	**1.5** 0.06	**241.0** 9.49	**3.0** 0.12	**312.0** 12.28	**5.3** 0.21	**98.0** 217
M244249DGW	M244210	M244210CD	TQOGW	S	**1.5** 0.06	**235.0** 9.25	**3.3** 0.13	**293.0** 11.54	**3.6** 0.14	**59.0** 129
LM245149DGW	LM245110	LM245110D	TQOGW	S	**1.5** 0.06	**242.0** 9.53	**3.3** 0.13	**293.0** 11.54	**3.6** 0.14	**42.0** 93.0
EE130901D	131400	131401CD	TQOW	S	**5.5** 0.22	**255.0** 10.04	**1.5** 0.06	**329.0** 12.95	**4.6** 0.18	**89.0** 197
EE529090DW	529157	529158XD	TQOW	S	**3.3** 0.13	**256.0** 10.08	**3.3** 0.13	**367.0** 14.45	**3.0** 0.12	**154** 339
EE700090D	700167	700168D	TQO	S	**3.5** 0.14	**259.0** 10.20	**6.4** 0.25	**381.0** 15.00	**3.2** 0.13	**226** 498
8576DW	8520	8520CD	TQOW	S	**1.5** 0.06	**250.0** 9.84	**3.3** 0.13	**305.0** 12.01	**3.3** 0.13	**50.0** 110
H247549D	H247510	–	2TDI	S	**1.5** 0.06	**259.0** 10.20	**6.4** 0.25	**346.0** 13.62	**4.1** 0.16	**206** 454
JM447749DW	JM447710	JM447710D	TQOW	S	**4.0** 0.16	**261.0** 10.28	**3.3** 0.13	**317.0** 12.48	**7.5** 0.28	**70.0** 154
NP461520	NP464023	NP467114	TQOW	S	**4.0** 0.16	**260.0** 10.24	**3.3** 0.13	**328.0** 12.91	**5.3** 0.21	**111** 245
EE127097DW	127135	127136CD	TQOW	S	**1.5** 0.06	**258.0** 10.16	**3.3** 0.13	**325.0** 12.80	**2.8** 0.11	**70.0** 155
LM247747DGW	LM247714	–	2TDIGW	S	**4.3** 0.17	**262.0** 10.30	**3.3** 0.13	**312.0** 12.28	**0.0** 0.00	**52.0** 114
LM247748DGW	LM247710	–	2TDIGW	S	**1.5** 0.06	**257.0** 10.12	**3.3** 0.13	**310.0** 12.20	**4.1** 0.16	**44.0** 96.0
EE126096DGW	126150	126151CD	TQOGW	S	**3.3** 0.13	**269.0** 10.59	**4.8** 0.19	**343.0** 13.50	**0.3** 0.01	**126** 277
HH249949D	HH249910	–	2TDI	P	**3.3** 0.13	**278.0** 10.94	**6.4** 0.25	**366.0** 14.41	**8.2** 0.32	**246** 543

[1]Cage type: S – Stamped steel, P – Pin type.

Continued on next page.

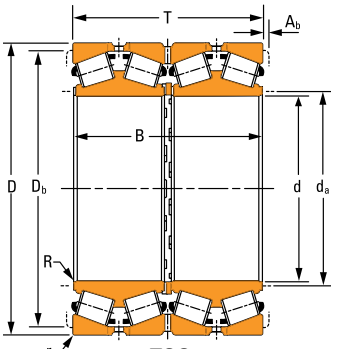

TQO

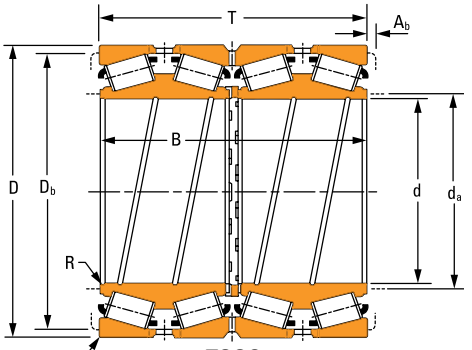

TQOG

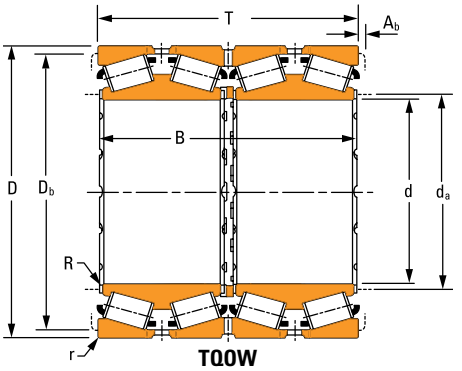

TQOW

TABLE 53. TQOW – 2TDIW PRODUCT DATA *– continued*

Bearing Dimensions				Load Ratings							
				One Million Revolutions				90 Million Revolutions			
Bore d	O.D. D	Width over Cups T	Width over Cones B	Dynamic Radial $C_{1(4)}$	e	Y_1	Y_2	Dynamic Radial C_{90}	Dynamic Axial C_{a90}	Dynamic Radial $C_{90(4)}$	K Factor
mm in.	**mm** in.	**mm** in.	**mm** in.	**kN** lbf				**kN** lbf	**kN** lbf	**kN** lbf	
250.283 9.8537	**339.938** 13.3834	**230** 9.0551	**230** 9.0551	**2840** 640000	0.31	2.18	3.25	**212** 47600	**112** 25200	**738** 165800	1.89
250.825 9.8750	**431.724** 16.9970	**298.453** 11.7501	**292.895** 11.5313	**5220** 1174000	0.33	2.03	3.03	**389** 87400	**221** 49700	**1354** 304000	1.76
254.000 10.0000	**358.775** 14.1250	**269.875** 10.6250	**269.875** 10.6250	**3180** 716000	0.33	2.03	3.03	**237** 53300	**135** 30300	**826** 185600	1.76
254.000 10.0000	**444.500** 17.5000	**279.400** 11.0000	**279.400** 11.0000	**4100** 920000	0.34	1.97	2.94	**305** 68500	**178** 40000	**1062** 238000	1.71
260 10.2362	**440** 17.3228	**300** 11.8110	**300** 11.8110	**4520** 1016000	0.69	0.98	1.46	**336** 75600	**397** 89100	**1170** 264000	0.85
260.350 10.2500	**365.125** 14.3750	**228.600** 9.0000	**228.600** 9.0000	**2360** 532000	0.37	1.80	2.68	**176** 39600	**113** 25400	**614** 137800	1.56
260.350 10.2500	**400.050** 15.7500	**253.995** 9.9998	**249.235** 9.8124	**2880** 648000	0.39	1.71	2.54	**215** 48200	**145** 32600	**748** 168000	1.48
260.350 10.2500	**406.400** 16.0000	**317.500** 12.5000	**314.325** 12.3750	**4080** 918000	0.33	2.02	3.01	**304** 68300	**173** 39000	**1058** 238000	1.75
260.350 10.2500	**419.100** 16.5000	**330.200** 13.0000	**327.025** 12.8750	**3920** 880000	0.60	1.12	1.67	**291** 65500	**302** 67800	**1014** 228000	0.97
266.700 10.5000	**355.600** 14.0000	**228.600** 9.0000	**230.188** 9.0625	**2800** 630000	0.36	1.87	2.79	**209** 46900	**129** 28900	**726** 163200	1.62
266.700 10.5000	**406.400** 16.0000	**260.355** 10.2502	**268.290** 10.5626	**3080** 690000	0.40	1.67	2.49	**229** 51400	**157** 35400	**796** 179200	1.45
269.875 10.6250	**381.000** 15.0000	**282.575** 11.1250	**282.575** 11.1250	**4000** 900000	0.33	2.03	3.03	**298** 67000	**170** 38100	**1038** 234000	1.76
276.225 10.8750	**381.000** 15.0000	**209.550** 8.2500	**187.325** 7.3750	**1612** 362000	0.58	1.15	1.72	**120** 27000	**120** 26900	**418** 94000	1.00
276.225 10.8750	**393.700** 15.5000	**269.878** 10.6251	**269.878** 10.6251	**3080** 690000	0.40	1.67	2.49	**229** 51400	**157** 35400	**796** 179200	1.45
279.400 11.0000	**393.700** 15.5000	**270.078** 10.6330	**269.875** 10.6250	**4140** 930000	0.43	1.57	2.34	**308** 69200	**226** 50900	**1072** 242000	1.36

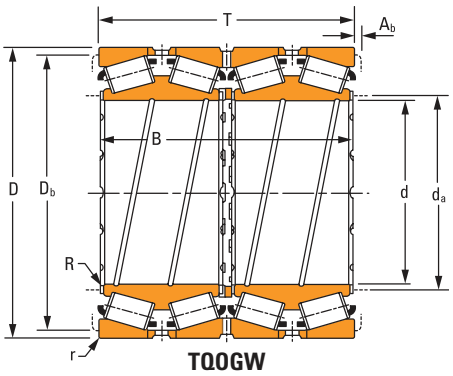

TQOGW

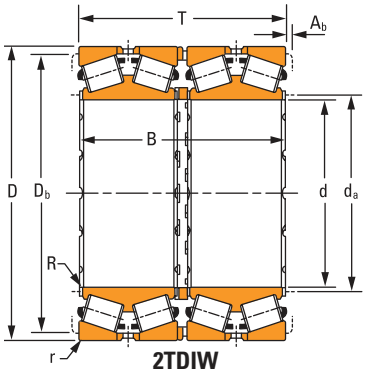

2TDIW

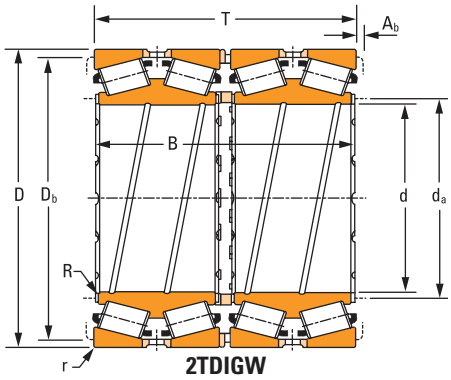

2TDIGW

Bearing Part No.			Design Type	Cage Type[1]	Mounting Dimensions					Weight
Double Cone	Single Cup	Double Cup			Max. Shaft Radius R	Cone Backing Diameter d_a	Max. Housing Radius r	Cup Backing Diameter D_b	Axial Cage Clearance A_b	
					mm in.	**mm** in.	**mm** in.	**mm** in.	**mm** in.	**kg** lbs.
NP872981	NP240622	NP560475	TQOW	S	**3.5** 0.14	**266.0** 10.47	**4.0** 0.16	**320.0** 12.60	**4.3** 0.17	**59.0** 131
HM252340D	HM252315	HM252315D	TQO	S	**3.5** 0.14	**278.0** 10.94	**3.5** 0.14	**397.0** 15.63	**6.5** 0.26	**170** 374
M249748DGW	M249710	–	2TDIGW	S	**3.3** 0.13	**272.0** 10.71	**3.3** 0.13	**335.0** 13.19	**4.3** 0.17	**86.0** 189
EE822101D	822175	822176D	TQO	P	**3.3** 0.13	**281.9** 11.10	**6.4** 0.25	**404.9** 15.94	**6.8** 0.27	**186** 410
NP639186	NP980566	NP423191	TQOW	S	**3.0** 0.12	**297.0** 11.69	**6.0** 0.24	**396.0** 15.59	**5.1** 0.20	**176** 387
EE134102D	134143	134144CD	TQO	S	**3.3** 0.13	**280.0** 11.02	**6.4** 0.25	**339.0** 13.35	**3.0** 0.12	**71.0** 156
EE221025D	221575	221576CD	TQO	S	**6.4** 0.25	**290.0** 11.42	**6.4** 0.25	**366.0** 14.41	**7.7** 0.30	**109** 240
EE324103D	324160	324161D	TQO	S	**6.4** 0.25	**287.3** 11.31	**3.3** 0.13	**376.0** 14.80	**3.2** 0.13	**152** 336
EE435103D	435165	435165D	TQO	S	**3.3** 0.13	**289.0** 11.38	**3.3** 0.13	**376.0** 14.80	**4.9** 0.19	**174** 384
LM451349DGW	LM451310	–	2TDIGW	S	**1.5** 0.06	**280.9** 11.06	**3.3** 0.13	**335.0** 13.19	**4.6** 0.18	**61.0** 135
EE275106D	275160	275161D	TQO	S	**3.3** 0.13	**290.0** 11.42	**6.4** 0.25	**373.0** 14.69	**4.8** 0.19	**115** 255
M252349DW	M252310	M252310CD	TQOW	S	**3.3** 0.13	**290.0** 11.42	**3.3** 0.13	**356.0** 14.02	**4.8** 0.19	**101** 222
89108D	89150	89151XD	TQO	S	**3.3** 0.13	**297.0** 11.69	**6.4** 0.25	**348.0** 13.70	**3.2** 0.13	**67.0** 147
EE275109DGW	275155	275156CD	TQOGW	S	**1.5** 0.06	**293.6** 11.56	**6.4** 0.25	**366.0** 14.41	**0.8** 0.03	**102** 224
M652949DW	M652911	–	2TDIW	S	**2.0** 0.08	**294.0** 11.57	**6.4** 0.25	**368.0** 14.49	**7.4** 0.29	**96.0** 211

[1]Cage type: S – Stamped steel, P – Pin type.

Continued on next page.

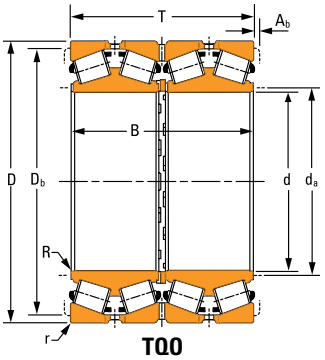

TQO

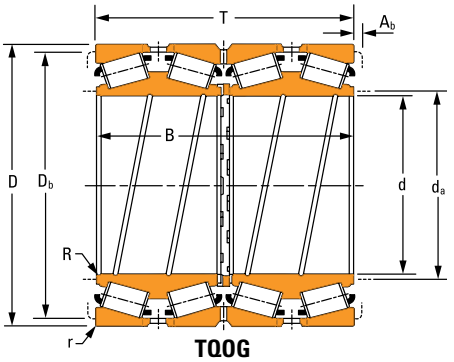

TQOG

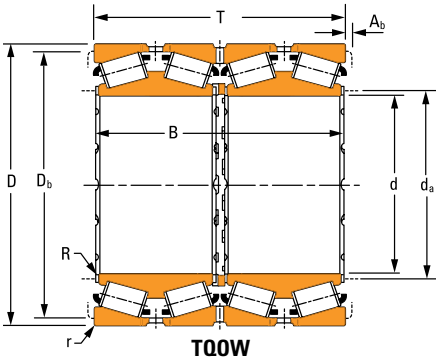

TQOW

TABLE 53. TQOW – 2TDIW PRODUCT DATA *– continued*

Bearing Dimensions				Load Ratings							
				One Million Revolutions				90 Million Revolutions			
Bore d	O.D. D	Width over Cups T	Width over Cones B	Dynamic Radial $C_{1(4)}$	e	Y_1	Y_2	Dynamic Radial C_{90}	Dynamic Axial C_{a90}	Dynamic Radial $C_{90(4)}$	K Factor
mm in.	**mm** in.	**mm** in.	**mm** in.	**kN** lbf				**kN** lbf	**kN** lbf	**kN** lbf	
279.400 11.0000	**393.700** 15.5000	**269.875** 10.6250	**269.875** 10.6250	**3040** 684000	0.38	1.78	2.65	**226** 50900	**148** 33200	**788** 177200	1.54
279.400 11.0000	**457.200** 18.0000	**536.778** 21.1330	**536.575** 21.1250	**9120** 2040000	0.33	2.03	3.03	**679** 153000	**386** 86800	**2360** 532000	1.76
279.400 11.0000	**469.900** 18.5000	**349.250** 13.7500	**346.075** 13.6250	**5620** 1262000	0.38	1.79	2.66	**418** 94000	**271** 60800	**1456** 328000	1.55
279.400 11.0000	**495.300** 19.5000	**384.175** 15.1250	**381.160** 15.0063	**5400** 1214000	0.40	1.67	2.49	**402** 90300	**277** 62200	**1400** 314000	1.45
280 11.0236	**420** 16.5354	**280** 11.0236	**280** 11.0236	**4440** 1000000	0.49	1.38	2.06	**331** 74400	**276** 62100	**1152** 260000	1.20
280.316 11.0361	**389.938** 15.3519	**275** 10.8268	**275** 10.8268	**4080** 918000	0.33	2.03	3.03	**304** 68300	**173** 38900	**1058** 238000	1.76
285.750 11.2500	**380.898** 14.9960	**244.475** 9.6250	**244.475** 9.6250	**2520** 566000	0.43	1.56	2.32	**187** 42100	**138** 31100	**652** 146600	1.35
288.925 11.3750	**406.400** 16.0000	**298.450** 11.7500	**298.450** 11.7500	**4140** 932000	0.34	2.00	2.97	**308** 69300	**179** 40100	**1074** 242000	1.73
292.100 11.5000	**422.275** 16.6250	**269.875** 10.6250	**269.875** 10.6250	**3780** 852000	0.32	2.11	3.15	**282** 63400	**154** 34700	**982** 220000	1.83
292.100 11.5000	**476.250** 18.7500	**292.100** 11.5000	**296.047** 11.6554	**5260** 1182000	0.29	2.31	3.44	**391** 88000	**196** 44000	**1362** 306000	2.00
294.975 11.6132	**389.898** 15.3503	**220.000** 8.6614	**260.000** 10.2362	**2940** 660000	0.33	2.03	3.03	**218** 49100	**124** 27900	**760** 171000	1.76
298.450 11.7500	**444.500** 17.5000	**241.300** 9.5000	**238.125** 9.3750	**3080** 694000	0.38	1.79	2.66	**230** 51700	**149** 33400	**800** 180000	1.55
299.975 11.8100	**439.948** 17.3208	**279.400** 11.0000	**280.988** 11.0625	**3120** 702000	0.42	1.61	2.41	**232** 52200	**165** 37200	**810** 182000	1.40
300 11.8110	**460** 18.1102	**388.5** 15.2953	**388.5** 15.2953	**5480** 1232000	0.31	2.20	3.28	**408** 91700	**213** 47900	**1420** 320000	1.91
300.038 11.8125	**422.275** 16.6250	**311.150** 12.2500	**311.150** 12.2500	**4520** 1016000	0.34	2.00	2.97	**336** 75600	**194** 43600	**1172** 264000	1.73

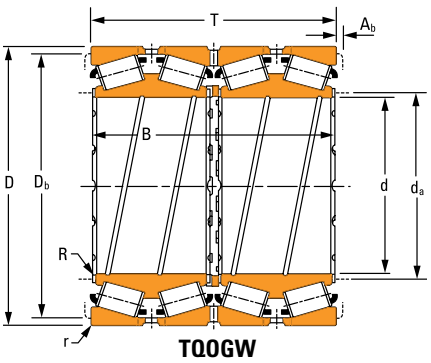

TQOGW

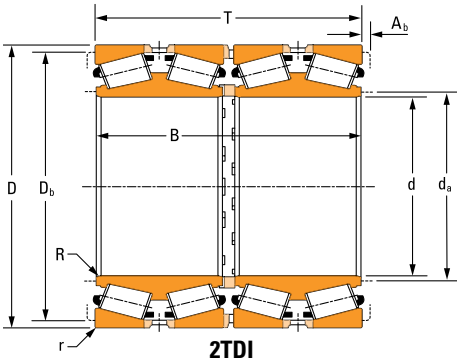

2TDI

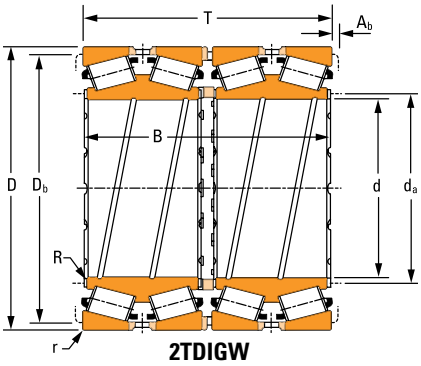

2TDIGW

Bearing Part No.			Design Type	Cage Type[1]	Mounting Dimensions					Weight
Double Cone	Single Cup	Double Cup			Max. Shaft Radius R	Cone Backing Diameter d_a	Max. Housing Radius r	Cup Backing Diameter D_b	Axial Cage Clearance A_b	
					mm in.	**mm** in.	**mm** in.	**mm** in.	**mm** in.	**kg** lbs.
EE135111DGW	135155	135156D	TQOGW	S	**1.5** 0.06	**297.0** 11.69	**6.4** 0.25	**368.0** 14.49	**1.8** 0.07	**98.0** 215
HH255149D	HH255110	–	2TDI	P	**1.5** 0.06	**309.0** 12.17	**6.4** 0.25	**412.0** 16.22	**12.7** 0.50	**355** 783
EE722111D	722185	722186CD	TQO	S	**6.4** 0.25	**314.0** 12.36	**3.3** 0.13	**430.0** 16.93	**3.6** 0.14	**232** 512
EE941106D	941950	–	2TDI	p	**1.5** 0.06	**310.0** 12.20	**3.3** 0.13	**459.0** 18.07	**11.0** 0.43	**312** 689
NP636921	NP371486	NP980520	TQOW	S	**3.6** 0.14	**302.0** 11.89	**4.5** 0.18	**389.0** 15.31	**5.1** 0.20	**131** 288
NP419087	NP501430	NP279609	TQOW	S	**3.5** 0.14	**302.0** 11.89	**3.5** 0.14	**366.0** 14.41	**5.8** 0.23	**99.0** 218
LM654648DW	LM654610	LM654610CD	TQOW	S	**1.5** 0.06	**302.0** 11.89	**3.3** 0.13	**356.0** 14.02	**2.0** 0.08	**78.0** 172
M255449DGW	M255410	–	2TDIGW	P	**3.3** 0.13	**310.0** 12.20	**3.3** 0.13	**379.0** 14.90	**7.5** 0.29	**124** 274
EE330116D	330166	330167D	TQO	P	**6.4** 0.25	**314.2** 12.37	**3.3** 0.13	**395.0** 15.55	**4.6** 0.18	**124** 274
EE921150D	921875	921876D	TQO	P	**1.5** 0.06	**314.0** 12.36	**3.3** 0.13	**442.0** 17.40	**8.2** 0.32	**198** 436
LM255749DGW	LM255710	–	2TDIGW	S	**4.3** 0.17	**313.0** 12.32	**3.3** 0.13	**370.0** 14.57	**20.0** 0.79	**71.0** 157
EE291176D	291750	291751CD	TQO	S	**8.0** 0.31	**332.0** 13.07	**1.5** 0.06	**416.0** 16.38	**10.2** 0.40	**122** 270
EE129119DG	129174	129175XD	TQOG	S	**3.3** 0.13	**321.0** 12.64	**4.8** 0.19	**407.0** 16.02	**0.8** 0.03	**140** 309
NP549475	NP695911	NP075542	TQOW	S	**4.0** 0.16	**330.0** 12.99	**4.0** 0.16	**424.0** 16.69	**4.8** 0.19	**241** 531
HM256849DW	HM256810	HM256810CD	TQOW	P	**3.3** 0.13	**322.0** 12.68	**3.3** 0.13	**394.0** 15.51	**7.0** 0.28	**140** 309

[1]Cage type: S – Stamped steel, P – Pin type.

Continued on next page.

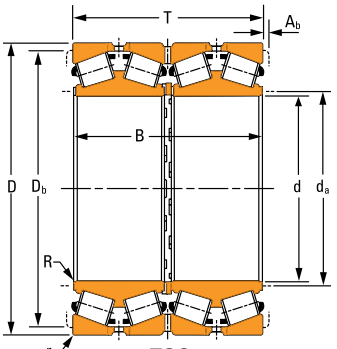

TQO

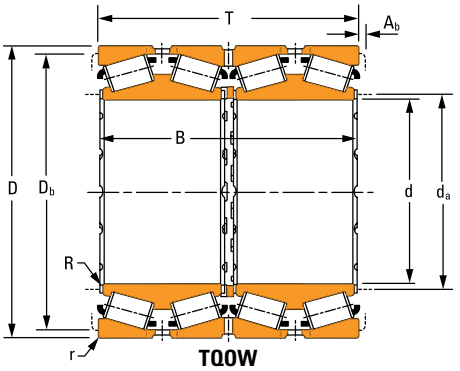

TQOW

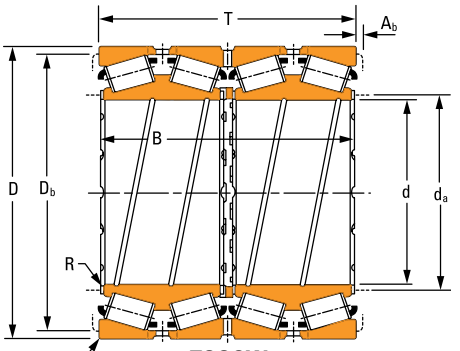

TQOGW

TABLE 53. TQOW – 2TDIW PRODUCT DATA *– continued*

Bearing Dimensions				Load Ratings							
				One Million Revolutions				90 Million Revolutions			
Bore d	O.D. D	Width over Cups T	Width over Cones B	Dynamic Radial $C_{1(4)}$	e	Y_1	Y_2	Dynamic Radial C_{90}	Dynamic Axial C_{a90}	Dynamic Radial $C_{90(4)}$	K Factor
mm in.	**mm** in.	**mm** in.	**mm** in.	**kN** lbf				**kN** lbf	**kN** lbf	**kN** lbf	
304.648 11.9940	**438.048** 17.2460	**279.400** 11.0000	**279.400** 11.0000	**3760** 844000	0.33	2.03	3.03	**280** 62900	**159** 35700	**974** 220000	1.76
304.648 11.9940	**438.048** 17.2460	**279.400** 11.0000	**280.990** 11.0626	**3820** 860000	0.47	1.43	2.13	**285** 64000	**231** 51800	**992** 222000	1.24
304.800 12.0000	**419.100** 16.5000	**269.875** 10.6250	**269.875** 10.6250	**4160** 936000	0.33	2.03	3.03	**310** 69700	**176** 39700	**1080** 242000	1.76
304.800 12.0000	**495.300** 19.5000	**349.250** 13.7500	**342.900** 13.5000	**5880** 1320000	0.40	1.67	2.49	**437** 98300	**301** 67700	**1524** 342000	1.45
304.800 12.0000	**501.650** 19.7500	**336.547** 13.2499	**336.550** 13.2500	**6240** 1404000	0.33	2.03	3.03	**465** 105000	**265** 59500	**1618** 364000	1.76
304.902 12.0040	**412.648** 16.2460	**266.700** 10.5000	**266.699** 10.4990	**3880** 874000	0.32	2.11	3.15	**289** 65000	**158** 35500	**1008** 226000	1.83
310 12.2047	**400** 15.7480	**300** 11.8110	**300** 11.8110	**3760** 846000	0.32	2.10	3.13	**280** 63000	**154** 34600	**976** 220000	1.82
317.500 12.5000	**422.275** 16.6250	**269.875** 10.6250	**269.876** 10.6250	**3440** 772000	0.32	2.11	3.15	**256** 57500	**140** 31400	**890** 200000	1.83
317.500 12.5000	**447.675** 17.6250	**327.025** 12.8750	**327.025** 12.8750	**4600** 1034000	0.34	2.01	2.99	**342** 76900	**196** 44100	**1192** 268000	1.74
317.500 12.5000	**447.675** 17.6250	**327.025** 12.8750	**327.025** 12.8750	**5840** 1312000	0.34	2.01	2.99	**435** 97800	**249** 56000	**1514** 340000	1.74
317.500 12.5000	**647.700** 25.5000	**419.100** 16.5000	**409.194** 16.1100	**10440** 2340000	0.28	2.42	3.61	**777** 175000	**370** 83200	**2700** 608000	2.10
330.200 13.0000	**444.500** 17.5000	**301.625** 11.8750	**301.625** 11.8750	**4260** 958000	0.33	2.03	3.03	**317** 71400	**181** 40600	**1106** 248000	1.76
330.200 13.0000	**482.600** 19.0000	**311.150** 12.2500	**306.387** 12.0625	**4360** 978000	0.39	1.72	2.56	**324** 72900	**217** 48700	**1128** 254000	1.49
330.302 13.0040	**438.023** 17.2450	**254.000** 10.0000	**247.650** 9.7500	**2560** 574000	0.46	1.46	2.18	**190** 42800	**149** 33600	**662** 149000	1.27
333.375 13.1250	**469.900** 18.5000	**342.900** 13.5000	**342.900** 13.5000	**5560** 1252000	0.34	2.01	2.99	**415** 93200	**238** 53400	**1444** 324000	1.74

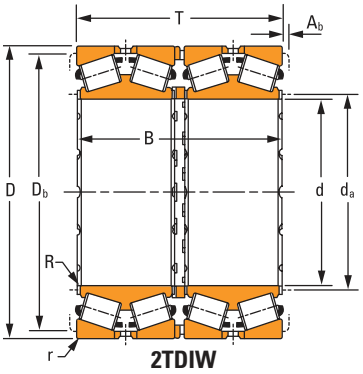

Bearing Part No.			Design Type	Cage Type[1]	Mounting Dimensions					Weight
Double Cone	Single Cup	Double Cup			Max. Shaft Radius R	Cone Backing Diameter d_a	Max. Housing Radius r	Cup Backing Diameter D_b	Axial Cage Clearance A_b	
					mm in.	**mm** in.	**mm** in.	**mm** in.	**mm** in.	**kg** lbs.
EE329119D	329172	329173D	TQO	S	**3.3** 0.13	**327.0** 12.87	**3.3** 0.13	**410.0** 16.14	**3.8** 0.15	**131** 289
M757448DGW	M757410	M757410D	TQOGW	S	**3.3** 0.13	**328.0** 12.91	**4.8** 0.19	**407.0** 16.02	**8.5** 0.34	**131** 289
M257149DW	M257110	M257110D	TQOW	S	**1.5** 0.06	**322.0** 12.68	**6.4** 0.25	**392.0** 15.43	**4.6** 0.18	**107** 237
EE724121D	724195	724196CD	TQO	S	**3.3** 0.13	**334.0** 13.15	**6.4** 0.25	**450.0** 17.72	**3.8** 0.15	**254** 559
HM258949D	HM258910	HM258910D	TQO	P	**3.3** 0.13	**332.0** 13.07	**6.4** 0.25	**464.0** 18.27	**8.4** 0.33	**268** 592
M257248DGW	M257210	M257210D	TQOGW	S	**3.3** 0.13	**325.0** 12.80	**3.3** 0.13	**388.0** 15.28	**6.8** 0.27	**105** 231
NP218100	NP394908	NP087208	TQOW	S	**2.5** 0.10	**326.0** 12.83	**4.0** 0.16	**377.0** 14.84	**0.0** 0.00	**93.0** 206
LM258648DGW	LM258610	LM258610D	TQOGW	S	**1.5** 0.06	**334.0** 13.15	**3.3** 0.13	**398.0** 15.67	**3.6** 0.14	**104** 230
HM259047DGW	HM259010	HM259010D	TQOGW	S	**3.3** 0.13	**340.0** 13.39	**3.3** 0.13	**418.0** 16.46	**10.1** 0.40	**162** 357
HM259049DW	HM259010	HM259010CD	TQOW	P	**3.3** 0.13	**340.0** 13.39	**3.3** 0.13	**418.0** 16.46	**10.1** 0.40	**167** 369
EE141250D	142551	142550XD	TQO	P	**1.5** 0.06	**350.0** 13.78	**3.3** 0.13	**600.0** 23.62	**15.4** 0.61	**633** 1396
M260149DW	M260110	M260110D	TQOW	P	**3.3** 0.13	**351.0** 13.82	**3.3** 0.13	**418.0** 16.46	**10.0** 0.39	**135** 297
EE526131D	526190	526191D	TQO	S	**1.5** 0.06	**351.0** 13.82	**3.3** 0.13	**449.0** 17.68	**3.2** 0.13	**169** 372
EE138131D	138172	138173XD	TQO	S	**1.5** 0.06	**347.0** 13.66	**3.3** 0.13	**412.0** 16.22	**3.2** 0.13	**98.0** 217
HM261049DW	HM261010	–	2TDIW	P	**3.3** 0.13	**357.0** 14.06	**3.3** 0.13	**439.0** 17.28	**9.6** 0.37	**194** 428

[1]Cage type: S – Stamped steel, P – Pin type.

Continued on next page.

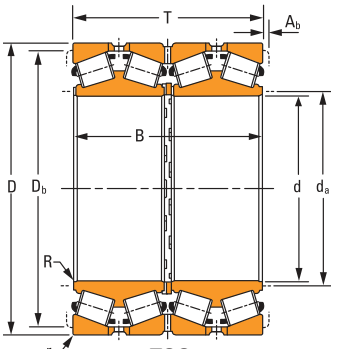

TQO

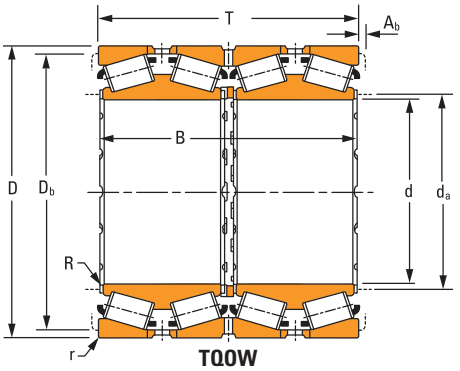

TQOW

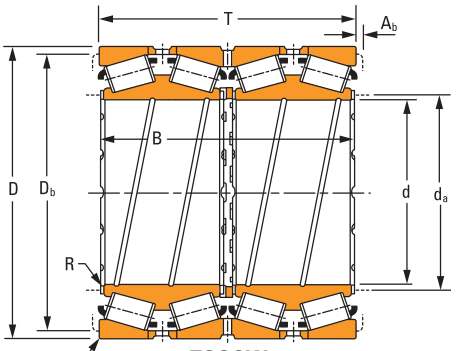

TQOGW

TABLE 53. TQOW – 2TDIW PRODUCT DATA *– continued*

Bearing Dimensions				Load Ratings							
				One Million Revolutions				90 Million Revolutions			
Bore d	O.D. D	Width over Cups T	Width over Cones B	Dynamic Radial $C_{1(4)}$	e	Y_1	Y_2	Dynamic Radial C_{90}	Dynamic Axial C_{a90}	Dynamic Radial $C_{90(4)}$	K Factor
mm in.	**mm** in.	**mm** in.	**mm** in.	**kN** lbf				**kN** lbf	**kN** lbf	**kN** lbf	
342.900 13.5000	**533.400** 21.0000	**301.625** 11.8750	**307.975** 12.1250	**6020** 1352000	0.33	2.03	3.03	**448** 101000	**255** 57300	**1560** 350000	1.76
342.900 13.5000	**571.500** 22.5000	**342.900** 13.5000	**342.900** 13.5000	**6820** 1534000	0.34	2.01	2.99	**508** 114000	**292** 65700	**1770** 398000	1.74
342.900 13.5000	**457.098** 17.9960	**254.000** 10.0000	**254.000** 10.0000	**2860** 644000	0.71	0.94	1.41	**213** 48000	**260** 58500	**742** 167000	0.82
343.052 13.5060	**457.098** 17.9960	**254.000** 10.0000	**254.000** 10.0000	**3180** 716000	0.47	1.43	2.13	**237** 53400	**192** 43200	**826** 185800	1.24
343.052 13.5060	**457.098** 17.9960	**254.000** 10.0000	**254.000** 10.0000	**3660** 822000	0.47	1.43	2.13	**272** 61200	**220** 49600	**948** 214000	1.24
346.075 13.6250	**457.098** 17.9960	**254.000** 10.0000	**254.000** 10.0000	**2420** 546000	0.48	1.41	2.10	**181** 40700	**149** 33400	**630** 141600	1.22
346.075 13.6250	**488.950** 19.2500	**358.775** 14.1250	**358.775** 14.1250	**6900** 1552000	0.34	2.01	2.99	**514** 116000	**295** 66200	**1790** 402000	1.74
347.662 13.6875	**469.900** 18.5000	**260.350** 10.2500	**260.350** 10.2500	**4120** 926000	0.33	2.03	3.03	**307** 68900	**175** 39200	**1068** 240000	1.76
347.662 13.6875	**469.900** 18.5000	**292.100** 11.5000	**292.100** 11.5000	**4980** 1122000	0.33	2.03	3.03	**372** 83500	**212** 47500	**1294** 290000	1.76
355.600 14.0000	**444.500** 17.5000	**241.300** 9.5000	**241.300** 9.5000	**2560** 574000	0.31	2.19	3.27	**190** 42700	**100** 22500	**662** 148800	1.90
355.600 14.0000	**457.200** 18.0000	**252.412** 9.9375	**252.412** 9.9375	**3280** 736000	0.32	2.11	3.15	**244** 54900	**133** 29900	**850** 191000	1.83
355.600 14.0000	**482.600** 19.0000	**269.875** 10.6250	**265.113** 10.4375	**3740** 840000	0.47	1.43	2.13	**278** 62500	**225** 50600	**968** 218000	1.24
355.600 14.0000	**482.600** 19.0000	**269.878** 10.6251	**265.113** 10.4375	**3060** 690000	0.42	1.60	2.39	**229** 51400	**165** 37100	**796** 179000	1.39
355.600 14.0000	**488.950** 19.2500	**317.500** 12.5000	**317.500** 12.5000	**5260** 1182000	0.33	2.03	3.03	**391** 88000	**223** 50100	**1362** 306000	1.76
355.600 14.0000	**501.650** 19.7500	**260.350** 10.2500	**244.475** 9.6250	**3660** 824000	0.44	1.53	2.29	**273** 61300	**206** 46200	**950** 214000	1.33

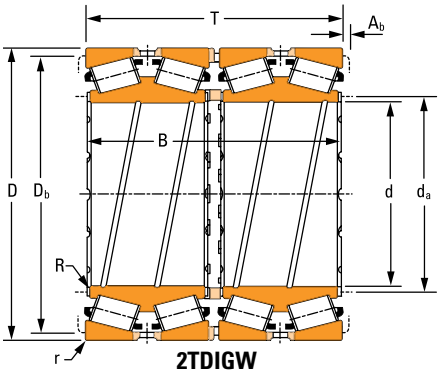

2TDIGW

Bearing Part No.			Design Type	Cage Type[1]	Mounting Dimensions					Weight
Double Cone	Single Cup	Double Cup			Max. Shaft Radius R	Cone Backing Diameter d_a	Max. Housing Radius r	Cup Backing Diameter D_b	Axial Cage Clearance A_b	
					mm in.	**mm** in.	**mm** in.	**mm** in.	**mm** in.	**kg** lbs.
EE971355D	972100	972103D	TQO	P	**3.3** 0.13	**370.0** 14.57	**3.3** 0.13	**501.0** 19.72	**11.3** 0.45	**252** 555
EE536136D	536225	536226D	TQO	P	**3.3** 0.13	**373.9** 14.72	**6.4** 0.25	**528.1** 20.79	**12.8** 0.50	**109** 241
LM961549DW	LM961510	LM961510XD	TQOW	S	**1.5** 0.06	**361.8** 14.25	**3.3** 0.13	**423.0** 16.65	**3.0** 0.12	**115** 254
LM761649DW	LM761610	LM761610D	TQOW	S	**1.5** 0.06	**361.0** 14.21	**3.3** 0.13	**432.0** 17.01	**1.8** 0.07	**111** 243
LM761649DGW	LM761610	–	2TDIGW	S	**1.5** 0.06	**361.0** 14.21	**3.3** 0.13	**432.0** 17.01	**1.8** 0.07	**111** 243
EE133137D	133180	133181D	TQO	S	**1.5** 0.06	**363.0** 14.29	**3.3** 0.13	**430.0** 16.93	**0.8** 0.03	**105** 231
HM262749DGW	HM262710	HM262710CD	TQOGW	P	**3.3** 0.13	**368.0** 14.49	**3.3** 0.13	**456.0** 17.95	**9.8** 0.39	**224** 493
LM262449DW	LM262410	LM262410D	TQOW	P	**1.5** 0.06	**365.0** 14.37	**3.3** 0.13	**444.0** 17.48	**10.2** 0.40	**130** 286
M262449DW	M262410	M262410D	TQOW	S	**3.3** 0.13	**369.0** 14.53	**3.3** 0.13	**443.0** 17.44	**6.3** 0.25	**145** 319
L163149D	L163110	L163110CD	TQO	S	**1.5** 0.06	**370.0** 14.57	**3.3** 0.13	**422.0** 16.61	**2.0** 0.08	**85.0** 187
LM263149DW	LM263110	LM263110D	TQOW	S	**1.5** 0.06	**372.0** 14.65	**3.3** 0.13	**434.0** 17.09	**4.8** 0.19	**105** 231
LM763449DGW	LM763410	LM763410D	TQOGW	S	**1.5** 0.06	**375.0** 14.76	**3.3** 0.13	**453.0** 17.83	**4.4** 0.17	**135** 298
EE204140D	204190	204191D	TQO	S	**1.5** 0.06	**374.0** 14.72	**3.3** 0.13	**455.0** 17.91	**3.2** 0.13	**133** 293
M263349DGW	M263310	–	2TDIGW	P	**1.5** 0.06	**374.0** 14.72	**3.3** 0.13	**459.0** 18.07	**8.9** 0.35	**180** 397
EE231401D	231975	231976CD	TQO	S	**3.3** 0.13	**382.0** 15.04	**3.3** 0.13	**472.0** 18.58	**3.2** 0.13	**154** 332

[1]Cage type: S – Stamped steel, P – Pin type.

Continued on next page.

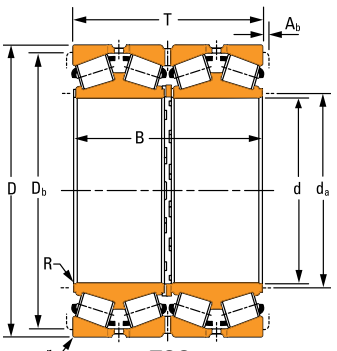

TQO

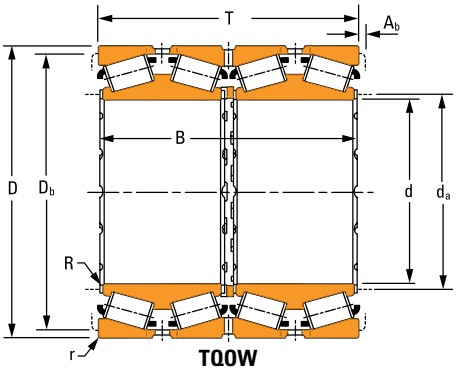

TQOW

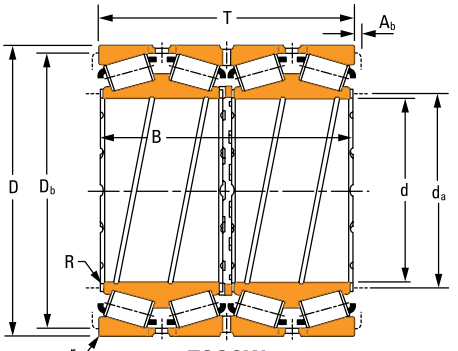

TQOGW

TABLE 53. TQOW – 2TDIW PRODUCT DATA *– continued*

Bearing Dimensions				Load Ratings							
				One Million Revolutions				90 Million Revolutions			
Bore d	O.D. D	Width over Cups T	Width over Cones B	Dynamic Radial $C_{1(4)}$	e	Y_1	Y_2	Dynamic Radial C_{90}	Dynamic Axial C_{a90}	Dynamic Radial $C_{90(4)}$	K Factor
mm in.	**mm** in.	**mm** in.	**mm** in.	**kN** lbf				**kN** lbf	**kN** lbf	**kN** lbf	
356.387 14.0310	**482.600** 19.0000	**222.250** 8.7500	**219.075** 8.6250	**1908** 428000	0.50	1.35	2.01	**142** 31900	**122** 27400	**494** 111200	1.17
368.300 14.5000	**523.875** 20.6250	**382.588** 15.0625	**382.588** 15.0625	**7920** 1780000	0.33	2.03	3.03	**589** 132000	**335** 75400	**2060** 462000	1.76
368.300 14.5000	**596.900** 23.5000	**342.900** 13.5000	**336.550** 13.2500	**6180** 1388000	0.41	1.63	2.42	**460** 103000	**326** 73400	**1602** 360000	1.41
374.650 14.7500	**501.650** 19.7500	**260.350** 10.2500	**250.825** 9.8750	**3720** 834000	0.47	1.43	2.13	**276** 62100	**224** 50300	**962** 216000	1.24
380 14.9606	**560** 22.0472	**360** 14.1732	**360** 14.1732	**6629** 1497700	0.36	1.87	2.79	**494** 111000	**305** 68500	**1722** 388000	1.62
380 14.9606	**620** 24.4094	**386.5** 15.2166	**386.5** 15.2166	**7920** 1782000	0.41	1.64	2.44	**590** 133000	**417** 93700	**2060** 462000	1.42
384.175 15.1250	**546.100** 21.5000	**400.050** 15.7500	**400.050** 15.7500	**7900** 1774000	0.33	2.03	3.03	**588** 132000	**335** 75200	**2040** 460000	1.76
385.762 15.1875	**514.350** 20.2500	**317.500** 12.5000	**317.500** 12.5000	**4720** 1060000	0.42	1.61	2.41	**351** 78900	**251** 56500	**1222** 274000	1.40
393.700 15.5000	**546.100** 21.5000	**288.925** 11.3750	**268.288** 10.5625	**3780** 850000	0.47	1.42	2.11	**282** 63300	**230** 51600	**980** 220000	1.23
393.700 15.5000	**546.100** 21.5000	**288.925** 11.3750	**288.925** 11.3750	**4560** 1026000	0.47	1.42	2.11	**340** 76400	**276** 62000	**1184** 266000	1.23
395 15.5512	**545** 21.4567	**288.7** 11.3660	**268.7** 10.5787	**5300** 1190000	0.46	1.48	2.20	**394** 88600	**308** 69200	**1372** 308000	1.28
400 15.7480	**530** 20.8661	**370** 14.5669	**370** 14.5669	**6120** 1374000	0.25	2.64	3.94	**455** 102000	**199** 44800	**1584** 356000	2.29
400 15.7480	**540** 21.2598	**280** 11.0236	**280** 11.0236	**4100** 924000	0.65	1.04	1.55	**306** 68700	**339** 76200	**1064** 240000	0.90
400.050 15.7500	**609.600** 24.0000	**317.500** 12.5000	**303.213** 11.9375	**6420** 1442000	0.38	1.75	2.61	**477** 107000	**313** 70400	**1662** 374000	1.52
406.400 16.0000	**546.100** 21.5000	**288.924** 11.3750	**268.288** 10.5620	**5140** 1154000	0.43	1.58	2.35	**382** 86000	**279** 62600	**1332** 300000	1.37

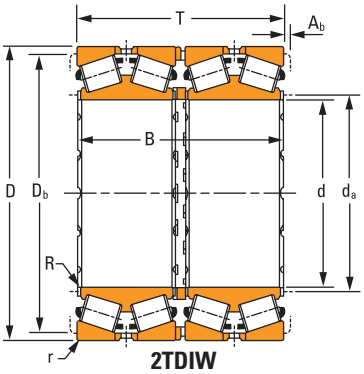

2TDIW

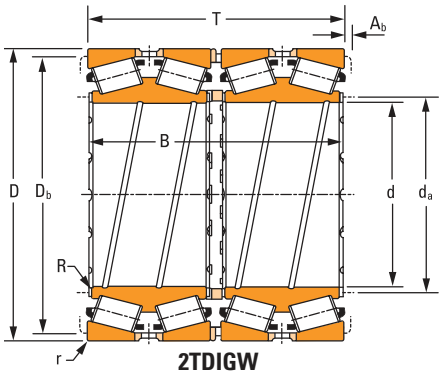

2TDIGW

Bearing Part No.			Design Type	Cage Type[1]	Mounting Dimensions					Weight
Double Cone	Single Cup	Double Cup			Max. Shaft Radius R	Cone Backing Diameter d_a	Max. Housing Radius r	Cup Backing Diameter D_b	Axial Cage Clearance A_b	
					mm in.	**mm** in.	**mm** in.	**mm** in.	**mm** in.	**kg** lbs.
EE161403D	161900	161901CD	TQO	S	**1.5** 0.06	**375.0** 14.76	**6.4** 0.25	**451.0** 17.76	**3.9** 0.15	**110** 242
HM265049DGW	HM265010	HM265010CD	TQOGW	P	**3.3** 0.13	**394.0** 15.50	**6.4** 0.25	**487.0** 19.17	**10.0** 0.39	**274** 605
EE181454D	182350	182351D	TQO	P	**6.4** 0.25	**408.0** 16.06	**6.4** 0.25	**552.0** 21.73	**13.1** 0.51	**367** 810
LM765149DW	LM765110	LM765110D	TQOW	S	**1.5** 0.06	**393.0** 15.47	**3.3** 0.13	**472.0** 18.58	**3.2** 0.13	**135** 298
JM466449DW	JM466410	JM466410D	TQOW	S	**2.0** 0.08	**519.0** 20.43	**6.0** 0.24	**522.0** 20.55	**9.5** 0.37	**186** 409
NP009472	NP057667	NP079688	TQOW	P	**5.0** 0.20	**436.0** 17.17	**5.0** 0.20	**568.0** 22.36	**9.6** 0.38	**450** 992
HM266448DGW	HM266410	HM266410CD	TQOGW	S	**3.5** 0.14	**414.0** 16.30	**6.4** 0.25	**507.0** 19.96	**7.1** 0.28	**302** 666
LM665949DGW	LM665910	LM665910CD	TQOGW	S	**3.3** 0.13	**409.0** 16.10	**3.3** 0.13	**482.0** 18.98	**4.6** 0.18	**182** 402
EE234157D	234215	234216D	TQO	S	**3.3** 0.13	**420.0** 16.54	**6.4** 0.25	**504.0** 19.84	**3.2** 0.13	**194** 427
LM767745D	LM767710	LM767710D	TQO	S	**1.5** 0.06	**418.0** 16.46	**6.4** 0.25	**510.0** 20.08	**5.6** 0.22	**205** 452
NP414928	NP696082	NP835117	TQOW	S	**2.0** 0.08	**418.0** 16.46	**4.0** 0.16	**513.0** 20.20	**3.2** 0.13	**193** 422
NP326900	NP080286	–	2TDIW	S	**3.3** 0.13	**426.0** 16.77	**6.4** 0.25	**500.0** 19.69	**6.3** 0.25	**224** 494
NP647639	NP673496	NP682333	TQOW	S	**5.0** 0.20	**428.0** 16.85	**5.0** 0.20	**495.0** 19.49	**4.1** 0.16	**178** 392
EE911576D	912400	912401D	TQO	P	**3.5** 0.14	**432.0** 17.01	**6.4** 0.25	**567.0** 22.32	**7.9** 0.31	**309** 681
NP600047	LM667714W NP338843	–	2TDIGW	S	**1.5** 0.06	**431.0** 16.97	**6.4** 0.25	**510.0** 20.08	**3.2** 0.13	**181** 399

[1]Cage type: S – Stamped steel, P – Pin type.

Continued on next page.

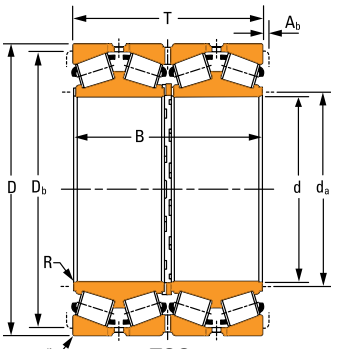

TQO

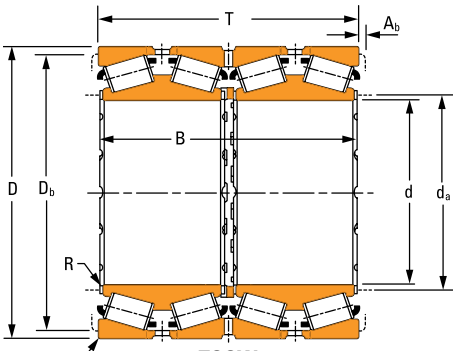

TQOW

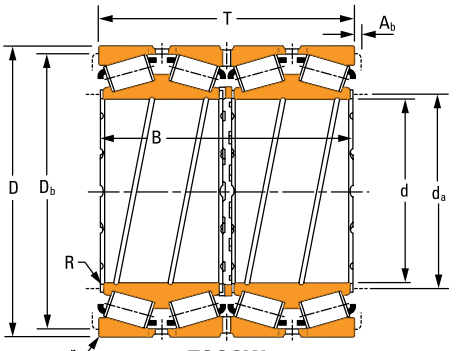

TQOGW

TABLE 53. TQOW – 2TDIW PRODUCT DATA *– continued*

Bearing Dimensions				Load Ratings							
				One Million Revolutions				90 Million Revolutions			
Bore d	O.D. D	Width over Cups T	Width over Cones B	Dynamic Radial $C_{1(4)}$	e	Y_1	Y_2	Dynamic Radial C_{90}	Dynamic Axial C_{a90}	Dynamic Radial $C_{90(4)}$	K Factor
mm in.	**mm** in.	**mm** in.	**mm** in.	**kN** lbf				**kN** lbf	**kN** lbf	**kN** lbf	
406.400 16.0000	**546.100** 21.5000	**288.925** 11.3750	**288.924** 11.3740	**4560** 1026000	0.47	1.42	2.11	**340** 76400	**276** 62000	**1184** 266000	1.23
406.400 16.0000	**565.150** 22.2500	**381.000** 15.0000	**381.000** 15.0000	**7100** 1594000	0.33	2.03	3.03	**528** 119000	**301** 67600	**1838** 414000	1.76
406.400 16.0000	**574.675** 22.6250	**266.697** 10.4999	**250.030** 9.8437	**3860** 868000	0.50	1.35	2.01	**287** 64600	**245** 55000	**1000** 224000	1.17
406.400 16.0000	**590.550** 23.2500	**400.050** 15.7500	**400.050** 15.7500	**8040** 1806000	0.32	2.08	3.10	**598** 135000	**333** 74900	**2080** 468000	1.80
409.575 16.1250	**546.100** 21.5000	**334.962** 13.1875	**334.962** 13.1875	**5880** 1322000	0.42	1.61	2.41	**438** 98500	**313** 70400	**1526** 342000	1.40
409.575 16.1250	**546.100** 21.5000	**334.962** 13.1875	**334.962** 13.1875	**6280** 1412000	0.49	1.37	2.04	**468** 105000	**394** 88600	**1628** 366000	1.19
415.925 16.3750	**590.550** 23.2500	**434.975** 17.1250	**434.975** 17.1250	**9940** 2240000	0.33	2.03	3.03	**740** 166000	**421** 94800	**2580** 580000	1.76
418.000 16.4567	**571.500** 22.5000	**336.550** 13.2500	**336.550** 13.2500	**6340** 1428000	0.44	1.53	2.29	**473** 106000	**355** 79700	**1646** 370000	1.33
419.100 16.5000	**622.300** 24.5000	**317.500** 12.5000	**320.370** 12.6130	**6100** 1374000	0.38	1.75	2.61	**455** 102000	**299** 67300	**1584** 356000	1.52
420 16.5354	**620** 24.4094	**355** 13.9764	**355** 13.9764	**8280** 1860000	0.40	1.67	2.49	**616** 139000	**424** 95300	**2140** 482000	1.45
431.800 17.0000	**571.500** 22.5000	**279.400** 11.0000	**279.400** 11.0000	**4280** 962000	0.55	1.23	1.84	**319** 71700	**298** 67000	**1110** 250000	1.07
431.800 17.0000	**571.500** 22.5000	**279.400** 11.0000	**279.400** 11.0000	**4840** 1086000	0.38	1.75	2.61	**360** 80900	**237** 53300	**1252** 282000	1.52
431.800 17.0000	**571.500** 22.5000	**336.550** 13.2500	**336.550** 13.2500	**6640** 1494000	0.44	1.53	2.29	**495** 111000	**371** 83500	**1724** 388000	1.33
431.800 17.0000	**635.000** 25.0000	**355.600** 14.0000	**355.600** 14.0000	**7360** 1654000	0.32	2.10	3.13	**548** 123000	**301** 67700	**1906** 428000	1.82
431.800 17.0000	**635.000** 25.0000	**355.600** 14.0000	**355.600** 14.0000	**8260** 1856000	0.38	1.78	2.65	**615** 138000	**400** 89800	**2140** 482000	1.54

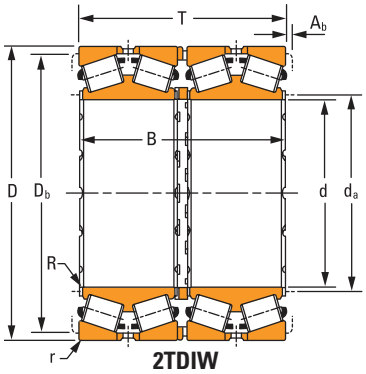

Bearing Part No.			Design Type	Cage Type[1]	Mounting Dimensions					Weight
Double Cone	Single Cup	Double Cup			Max. Shaft Radius R	Cone Backing Diameter d_a	Max. Housing Radius r	Cup Backing Diameter D_b	Axial Cage Clearance A_b	
					mm in.	**mm** in.	**mm** in.	**mm** in.	**mm** in.	**kg** lbs.
LM767749DGW	LM767710	LM767710D	TQOGW	p	**1.5** 0.06	**427.0** 16.81	**6.4** 0.25	**510.0** 20.08	**8.8** 0.35	**186** 410
M267949D	M267910	M267910XD	TQO	P	**3.3** 0.13	**432.0** 17.01	**6.4** 0.25	**528.0** 20.79	**10.4** 0.40	**288** 634
EE285161D	285226	285228D	TQO	S	**3.3** 0.13	**435.0** 17.13	**3.3** 0.13	**534.0** 21.02	**3.2** 0.13	**209** 462
EE833161XD	833232	833233D	TQO	P	**3.3** 0.13	**435.0** 17.13	**6.4** 0.25	**549.0** 21.61	**10.9** 0.43	**369** 813
M667947DGW	M667911	M667911D	TQOGW	S	**2.0** 0.08	**431.0** 16.97	**6.4** 0.25	**510.0** 20.08	**4.8** 0.19	**217** 479
NP160252	NP015239	NP035194	TQOW	P	**2.3** 0.09	**428.5** 16.87	**6.4** 0.25	**510.0** 20.08	**8.5** 0.33	**217** 478
M268749DGW	M268710	M268710CD	TQOGW	P	**3.3** 0.13	**444.0** 17.48	**6.4** 0.25	**548.9** 21.61	**12.3** 0.49	**398** 876
LM769340DWA	LM769310	–	2TDIW	S	**1.5** 0.06	**443.0** 17.44	**6.4** 0.25	**534.0** 21.02	**0.0** 0.00	**261** 576
EE261650D	262450	262450XD	TQO	P	**3.5** 0.14	**449.0** 17.68	**6.8** 0.27	**581.9** 22.91	**9.2** 0.36	**318** 701
NP815821	NP359748	NP761158	TQOW	P	**6.0** 0.24	**453.0** 17.83	**5.0** 0.20	**579.0** 22.80	**10.9** 0.42	**367** 808
LM869449DGW	LM869410	LM869410CD	TQOGW	S	**1.5** 0.06	**453.0** 17.83	**3.3** 0.13	**537.0** 21.14	**9.8** 0.39	**188** 415
EE239172DW	239227	239228XD	TQOW	S	**1.5** 0.06	**452.1** 17.80	**3.3** 0.13	**540.0** 21.26	**4.1** 0.16	**193** 427
LM769349DW	LM769310	LM769310D	TQOW	P	**1.5** 0.06	**453.0** 17.83	**6.4** 0.25	**534.0** 21.02	**10.5** 0.41	**240** 529
EE931170D	931250	931251XD	TQO	P	**6.4** 0.25	**468.1** 18.43	**6.4** 0.25	**591.1** 23.27	**9.6** 0.38	**394** 869
NP891819	NP241954	NP627036	TQOW	S	**6.4** 0.25	**470.0** 18.50	**6.4** 0.25	**588.0** 23.15	**5.8** 0.23	**390** 860

[1]Cage type: S – Stamped steel, P – Pin type.

Continued on next page.

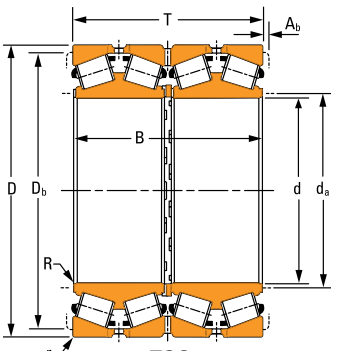

TQO

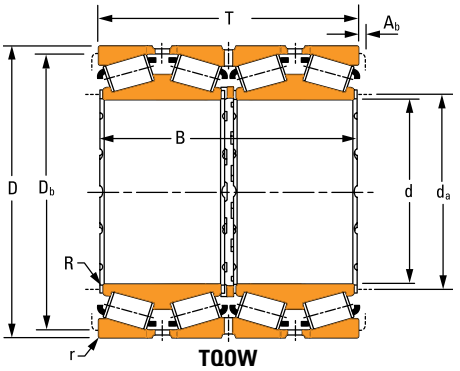

TQOW

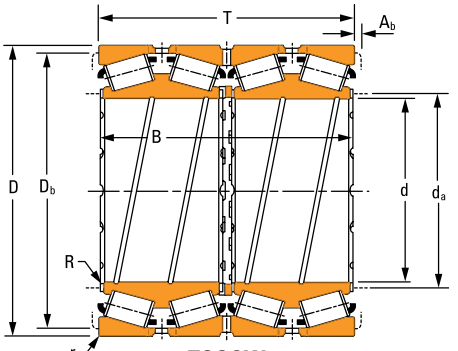

TQOGW

TABLE 53. TQOW – 2TDIW PRODUCT DATA *– continued*

Bearing Dimensions					Load Ratings							
					One Million Revolutions				90 Million Revolutions			
Bore d	O.D. D	Width over Cups T	Width over Cones B	d_1 (2TDIGWE)	Dynamic Radial $C_{1(4)}$	e	Y_1	Y_2	Dynamic Radial C_{90}	Dynamic Axial C_{a90}	Dynamic Radial $C_{90(4)}$	K Factor
mm in.	**mm** in.	**mm** in.	**mm** in.	**mm** in.	**kN** lbf				**kN** lbf	**kN** lbf	**kN** lbf	
432.003 17.0080	**609.524** 23.9970	**317.500** 12.5000	**317.500** 12.5000	–	**5980** 1346000	0.35	1.94	2.89	**446** 100000	**265** 59600	**1552** 350000	1.68
440 17.3228	**580** 22.8346	**360** 14.1732	**360** 14.1732	–	**6960** 1566000	0.40	1.67	2.49	**518** 117000	**357** 80200	**1806** 406000	1.45
440 17.3228	**650** 25.5906	**353.5** 13.9173	**353.5** 13.9173	–	**8220** 1848000	0.45	1.51	2.25	**612** 138000	**465** 105000	**2140** 478000	1.31
447.675 17.6250	**635.000** 25.0000	**463.550** 18.2500	**463.550** 18.2500	–	**11400** 2560000	0.33	2.03	3.03	**849** 191000	**484** 109000	**2960** 664000	1.76
449.949 17.7145	**594.949** 23.4232	**368.000** 14.4882	**368.000** 14.4882	–	**6940** 1560000	0.33	2.03	3.03	**517** 116000	**294** 66200	**1800** 404000	1.76
449.948 17.7145	**594.949** 23.4232	**368.000** 14.4882	**368.000** 14.4882	–	**7580** 1702000	0.33	2.03	3.03	**564** 127000	**321** 72100	**1962** 442000	1.76
450 17.7165	**595** 23.4252	**415** 16.3386	**415** 16.3386	**520.192** 20.4800	**8720** 1962000	0.31	2.16	3.22	**650** 146000	**346** 77900	**2260** 508000	1.87
456.794 17.9840	**761.873** 29.9950	**527.050** 20.7500	**527.050** 20.7500	–	**12360** 2780000	0.44	1.52	2.27	**920** 207000	**695** 156000	**3200** 720000	1.32
457.073 17.9950	**730.148** 28.7460	**419.100** 16.5000	**412.750** 16.2500	–	**9840** 2220000	0.39	1.72	2.56	**733** 165000	**492** 111000	**2560** 574000	1.49
457.200 18.0000	**596.900** 23.5000	**279.400** 11.0000	**276.225** 10.8750	–	**5220** 1174000	0.47	1.43	2.13	**389** 87500	**315** 70800	**1354** 304000	1.24
457.200 18.0000	**596.900** 23.5000	**279.400** 11.0000	**276.225** 10.8750	–	**5420** 1220000	0.47	1.43	2.13	**404** 90800	**327** 73500	**1406** 316000	1.24
457.200 18.0000	**596.900** 23.5000	**279.400** 11.0000	**276.225** 10.8750	–	**4920** 1108000	0.41	1.66	2.48	**367** 82400	**254** 57100	**1278** 288000	1.44
457.200 18.0000	**660.400** 26.0000	**323.850** 12.7500	**323.850** 12.7500	–	**6140** 1378000	0.37	1.80	2.68	**457** 103000	**292** 65700	**1590** 358000	1.56
457.200 18.0000	**749.808** 29.5200	**444.500** 17.5000	**438.150** 17.2500	–	**12080** 2720000	0.32	2.11	3.15	**900** 202000	**491** 110000	**3140** 704000	1.83
459.949 18.1082	**624.924** 24.6033	**421.000** 16.5748	**421.000** 16.5748	–	**8600** 1932000	0.33	2.03	3.03	**640** 144000	**364** 81900	**2220** 502000	1.76

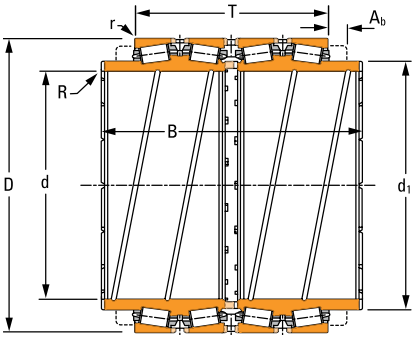

2TDIGWE

Bearing Part No.			Design Type	Cage Type[1]	Mounting Dimensions					Weight
Double Cone	Single Cup	Double Cup			Max. Shaft Radius R	Cone Backing Diameter d_a	Max. Housing Radius r	Cup Backing Diameter D_b	Axial Cage Clearance A_b	
					mm in.	**mm** in.	**mm** in.	**mm** in.	**mm** in.	**kg** lbs.
EE736173D	736238	736239D	TQO	P	**3.5** 0.14	**459.0** 18.07	**6.4** 0.25	**570.0** 22.44	**9.5** 0.37	**292** 643
NP460063	NP369269	NP112080	TQOGW	S	**3.0** 0.12	**465.0** 18.31	**7.5** 0.30	**543.0** 21.38	**4.8** 0.19	**257** 565
NP834407	NP402991	NP677830	TQOW	P	**6.0** 0.24	**477.0** 18.78	**6.0** 0.24	**609.0** 23.98	**9.5** 0.37	**394** 868
M270749DGW	M270710	M270710CD	TQOGW	P	**3.3** 0.13	**478.0** 18.82	**6.4** 0.25	**591.0** 23.27	**13.2** 0.52	**488** 1076
M270449DW	M270410	M270410D	TQOW	P	**3.0** 0.12	**474.0** 18.66	**6.0** 0.24	**561.0** 22.09	**9.7** 0.38	**284** 626
M270448DGW	M270410	M270410D	TQOGW	S	**3.0** 0.12	**474.0** 18.66	**6.0** 0.24	**561.0** 22.09	**5.6** 0.22	**274** 604
NP720022	NP720023	–	2TDIGWE	P	**1.5** 0.06	**472.0** 18.58	**6.0** 0.24	**561.0** 22.09	**10.9** 0.42	**310** 683
EE425176D	425299	425299D	TQO	P	**3.3** 0.13	**500.0** 19.69	**6.4** 0.25	**696.0** 27.40	**9.4** 0.37	**987** 2177
EE671798D	672873	672875D	TQO	P	**1.5** 0.06	**491.0** 19.33	**6.4** 0.25	**675.0** 26.57	**12.9** 0.51	**676** 1490
L770847DGW	L770810	L770810D	TQOGW	S	**1.5** 0.06	**478.0** 18.82	**3.3** 0.13	**567.0** 22.32	**5.4** 0.21	**192** 424
NP129155	NP344631	NP820547	TQOW	S	**1.5** 0.06	**478.0** 18.82	**3.3** 0.13	**567.0** 22.32	**6.4** 0.25	**196** 432
EE244181D	244235	244236CD	TQO	S	**1.5** 0.06	**478.0** 18.82	**3.3** 0.13	**567.0** 22.32	**6.2** 0.24	**198** 436
EE737179D	737260	737261D	TQO	P	**3.3** 0.13	**489.0** 19.25	**6.4** 0.25	**614.9** 24.21	**8.6** 0.34	**372** 821
EE423181XD	423296	423296D	TQO	P	**6.4** 0.25	**515.0** 20.28	**6.4** 0.25	**702.0** 27.64	**6.5** 0.26	**817** 1802
M271149DGW	M271110	M271110CD	TQOGW	P	**3.0** 0.12	**486.0** 19.13	**9.0** 0.35	**585.0** 23.03	**10.0** 0.39	**380** 839

[1]Cage type: S – Stamped steel, P – Pin type.

Continued on next page.

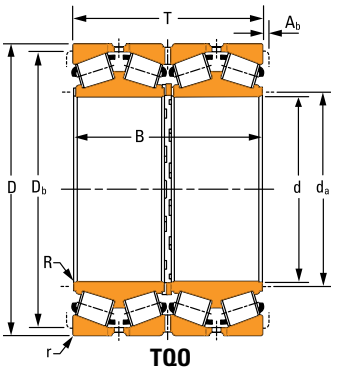

TQO

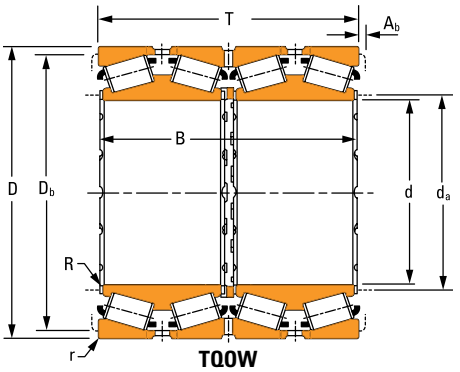

TQOW

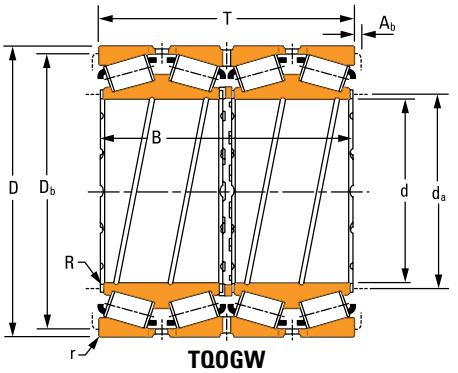

TQOGW

TABLE 53. TQOW – 2TDIW PRODUCT DATA *– continued*

Bearing Dimensions				Load Ratings							
				One Million Revolutions				90 Million Revolutions			
Bore d	O.D. D	Width over Cups T	Width over Cones B	Dynamic Radial $C_{1(4)}$	e	Y_1	Y_2	Dynamic Radial C_{90}	Dynamic Axial C_{a90}	Dynamic Radial $C_{90(4)}$	K Factor
mm in.	**mm** in.	**mm** in.	**mm** in.	**kN** lbf				**kN** lbf	**kN** lbf	**kN** lbf	
460 18.1102	**586** 23.0709	**266** 10.4724	**266** 10.4724	**4780** 1076000	0.47	1.44	2.15	**356** 80000	**285** 64200	**1240** 278000	1.25
460 18.1102	**590** 23.2283	**360** 14.1732	**360** 14.1732	**7060** 1588000	0.28	2.42	3.61	**526** 118000	**250** 56300	**1830** 412000	2.10
475.000 18.7008	**600.000** 23.6220	**368.000** 14.4882	**368.000** 14.4882	**6500** 1462000	0.29	2.31	3.44	**484** 109000	**242** 54300	**1684** 378000	2.00
475 18.7008	**620** 24.4094	**380** 14.9606	**380** 14.9606	**8940** 2000000	0.31	2.15	3.20	**665** 150000	**357** 80200	**2320** 520000	1.86
475 18.7008	**620** 24.4094	**380** 14.9606	**380** 14.9606	**6620** 1490000	0.35	1.94	2.89	**494** 111000	**295** 66200	**1718** 386000	1.68
479.425 18.8750	**679.450** 26.7500	**495.300** 19.5000	**495.300** 19.5000	**13000** 2920000	0.33	2.03	3.03	**968** 218000	**551** 124000	**3360** 758000	1.76
482.600 19.0000	**615.950** 24.2500	**330.200** 13.0000	**330.200** 13.0000	**5900** 1324000	0.33	2.03	3.03	**439** 98600	**250** 56100	**1528** 344000	1.76
482.600 19.0000	**615.950** 24.2500	**419.250** 16.5059	**420.000** 16.5354	**8180** 1840000	0.26	2.55	3.80	**609** 137000	**276** 62000	**2120** 478000	2.21
482.600 19.0000	**635.000** 25.0000	**421.000** 16.5748	**421.000** 16.5748	**9120** 2040000	0.33	2.03	3.03	**679** 153000	**386** 86800	**2360** 532000	1.76
482.600 19.0000	**647.700** 25.5000	**417.512** 16.4375	**417.512** 16.4375	**8620** 1936000	0.33	2.03	3.03	**641** 144000	**365** 82100	**2240** 502000	1.76
482.600 19.0000	**615.950** 24.2500	**500.000** 19.6850	**500.000** 19.6850	**6480** 1458000	0.33	2.03	3.03	**483** 109000	**275** 61800	**1682** 378000	1.76
488.950 19.2500	**660.400** 26.0000	**361.950** 14.2500	**365.125** 14.3750	**8260** 1856000	0.31	2.19	3.27	**614** 138000	**323** 72600	**2140** 480000	1.90
488.950 19.2500	**679.450** 26.7500	**444.500** 17.5000	**444.500** 17.5000	**11480** 2580000	0.35	1.95	2.91	**854** 192000	**506** 114000	**2980** 668000	1.69
489.026 19.2530	**634.873** 24.9950	**320.675** 12.6250	**320.675** 12.6250	**6480** 1456000	0.47	1.43	2.13	**482** 108000	**390** 87800	**1680** 378000	1.24
489.026 19.2530	**634.873** 24.9950	**320.675** 12.6250	**320.675** 12.6250	**5120** 1148000	0.34	1.96	2.92	**380** 85500	**223** 50200	**1324** 298000	1.70

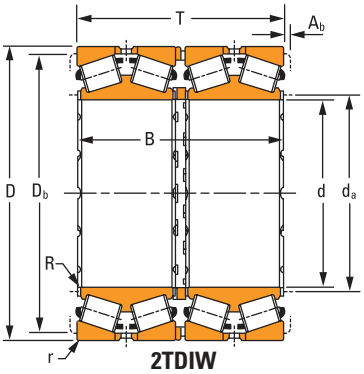

2TDIW

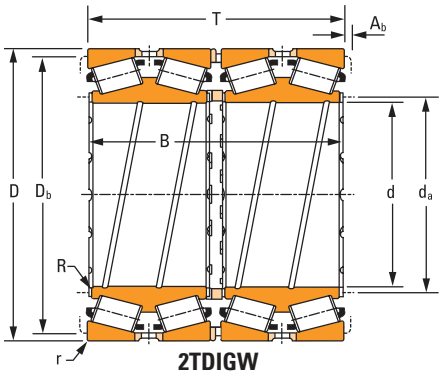

2TDIGW

Bearing Part No.			Design Type	Cage Type[1]	Mounting Dimensions					Weight
Double Cone	Single Cup	Double Cup			Max. Shaft Radius R	Cone Backing Diameter d_a	Max. Housing Radius r	Cup Backing Diameter D_b	Axial Cage Clearance A_b	
					mm in.	**mm** in.	**mm** in.	**mm** in.	**mm** in.	**kg** lbs.
JL770549DGW	JL770510	JL770510CD	TQOGW	S	**4.0** 0.16	**480.0** 18.90	**7.0** 0.28	**555.0** 21.85	**1.5** 0.06	**165** 360
NP051296	NP782588	–	2TDIW	S	**3.0** 0.12	**483.0** 19.02	**3.0** 0.12	**561.0** 22.09	**6.1** 0.24	**246** 541
NP269618	NP897314	–	2TDIGW	S	**2.0** 0.08	**497.0** 19.57	**6.4** 0.25	**570.0** 22.44	**1.6** 0.06	**247** 545
JM171649DGW	JM171610	–	2TDIGW	P	**2.5** 0.10	**496.0** 19.53	**5.0** 0.20	**588.0** 23.15	**12.0** 0.47	**297** 654
JLM371942DG	JLM371914 JLM371914W	–	2TDIGW	S	**3.3** 0.13	**500.0** 19.69	**6.4** 0.25	**588.0** 23.15	**0.0** 0.00	**298** 656
M272749DGW	M272710	M272710CD	TQOGW	P	**3.3** 0.13	**510.0** 20.08	**6.4** 0.25	**633.0** 24.92	**14.0** 0.55	**599** 1320
LM272249DGW	LM272210	LM272210CD	TQOGW	S	**3.3** 0.13	**504.0** 19.84	**6.4** 0.25	**585.0** 23.03	**5.8** 0.23	**236** 520
NP907965	NP889064	–	2TDIGW	S	**2.5** 0.10	**504.0** 19.84	**4.0** 0.16	**588.0** 23.15	**2.7** 0.11	**301** 665
M272449DW	M272410	–	2TDIW	P	**3.0** 0.12	**507.0** 19.96	**6.4** 0.25	**603.0** 23.74	**0.0** 0.00	**356** 786
M272647DGW	M272610	M272610D	TQOGW	P	**3.3** 0.13	**510.0** 20.08	**6.4** 0.25	**609.0** 23.98	**4.4** 0.17	**412** 909
LM272345DGW	LM272315 LM272316	–	2TDIGW	S	**6.4** 0.25	**510.0** 20.08	**6.4** 0.25	**585.0** 23.03	**0.0** 0.00	**333** 734
EE640193D	640260	640261CD	TQO	P	**8.0** 0.31	**516.0** 20.31	**6.4** 0.25	**624.0** 24.57	**11.7** 0.46	**356** 785
NP323192	NP335700	NP589146	TQOW	P	**3.3** 0.13	**519.0** 20.43	**6.4** 0.25	**639.0** 25.16	**9.5** 0.37	**505** 1113
LM772749DGW	LM772710	LM772710CD	TQOGW	S	**3.3** 0.13	**516.0** 20.31	**3.3** 0.13	**600.0** 23.62	**4.8** 0.19	**252** 556
EE243193D	243250	243251D	TQO	S	**3.3** 0.13	**516.0** 20.31	**3.3** 0.13	**603.0** 23.74	**4.3** 0.17	**279** 616

[1]Cage type: S – Stamped steel, P – Pin type.

Continued on next page.

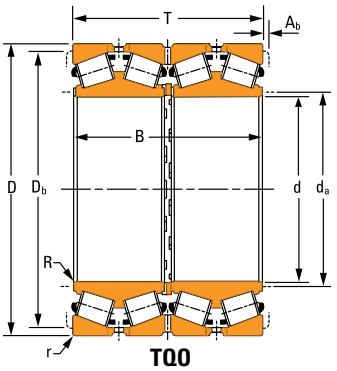

TQO

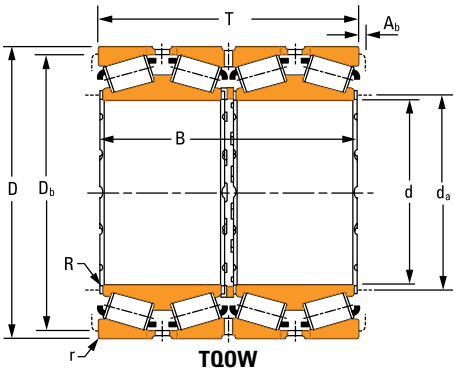

TQOW

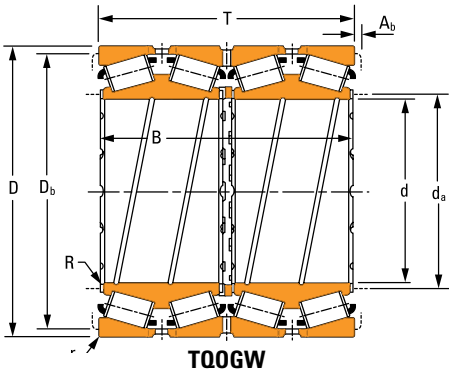

TQOGW

TABLE 53. TQOW – 2TDIW PRODUCT DATA *– continued*

Bearing Dimensions				Load Ratings							
				One Million Revolutions				90 Million Revolutions			
Bore d	O.D. D	Width over Cups T	Width over Cones B	Dynamic Radial $C_{1(4)}$	e	Y_1	Y_2	Dynamic Radial C_{90}	Dynamic Axial C_{a90}	Dynamic Radial $C_{90(4)}$	K Factor
mm in.	**mm** in.	**mm** in.	**mm** in.	**kN** lbf				**kN** lbf	**kN** lbf	**kN** lbf	
490 19.2913	**625** 24.6063	**385** 15.1575	**385** 15.1575	**6820** 1532000	0.33	2.04	3.04	**507** 114000	**287** 64500	**1766** 398000	1.77
500 19.6850	**720** 28.3465	**420** 16.5354	**420** 16.5354	**10440** 2340000	0.48	1.41	2.10	**777** 175000	**639** 144000	**2700** 608000	1.22
500 19.6850	**730** 28.7402	**420** 16.5354	**420** 16.5354	**9040** 2040000	0.33	2.03	3.03	**674** 151000	**384** 86200	**2340** 528000	1.76
500 19.6850	**830** 32.6772	**568.5** 22.3819	**568.5** 22.3819	**16040** 3600000	0.35	1.92	2.85	**1190** 269000	**718** 161000	**4160** 936000	1.66
501.650 19.7500	**673.100** 26.5000	**387.350** 15.2500	**400.050** 15.7500	**9040** 2040000	0.31	2.15	3.20	**674** 151000	**362** 81400	**2340** 528000	1.86
501.650 19.7500	**711.200** 28.0000	**520.700** 20.5000	**520.700** 20.5000	**12300** 2760000	0.33	2.03	3.03	**916** 206000	**521** 117000	**3180** 716000	1.76
508.000 20.0000	**695.325** 27.3750	**415.925** 16.3750	**415.925** 16.3750	**10700** 2400000	0.33	2.03	3.03	**796** 179000	**453** 102000	**2780** 624000	1.76
508.000 20.0000	**762.000** 30.0000	**463.550** 18.2500	**463.550** 18.2500	**10720** 2420000	0.38	1.78	2.65	**799** 180000	**519** 117000	**2780** 626000	1.54
510 20.0787	**655** 25.7874	**379** 14.9213	**377** 14.8426	**9100** 2040000	0.33	2.03	3.03	**677** 152000	**386** 86700	**2360** 530000	1.76
510 20.0787	**730** 28.7402	**520** 20.4724	**520** 20.4724	**13980** 3140000	0.34	1.98	2.96	**1040** 234000	**606** 136000	**3620** 816000	1.72
514.350 20.2500	**673.100** 26.5000	**422.275** 16.6250	**422.275** 16.6250	**8260** 1856000	0.32	2.11	3.15	**615** 138000	**336** 75400	**2140** 482000	1.83
519.112 20.4375	**736.600** 29.0000	**536.575** 21.1250	**536.575** 21.1250	**13140** 2960000	0.33	2.03	3.03	**978** 220000	**557** 125000	**3400** 766000	1.76
520.700 20.5000	**711.200** 28.0000	**400.050** 15.7500	**400.050** 15.7500	**8960** 2020000	0.33	2.03	3.03	**667** 150000	**380** 85400	**2320** 522000	1.76
530 20.8661	**880** 34.6457	**543** 21.3780	**543** 21.3780	**16700** 3760000	0.46	1.48	2.20	**1240** 279000	**971** 218000	**4320** 972000	1.28
536.575 21.1250	**761.873** 29.9950	**558.800** 22.0000	**558.800** 22.0000	**13960** 3140000	0.33	2.03	3.03	**1040** 234000	**592** 133000	**3620** 814000	1.76

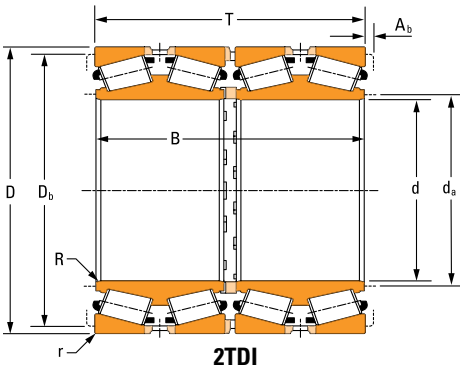

2TDI

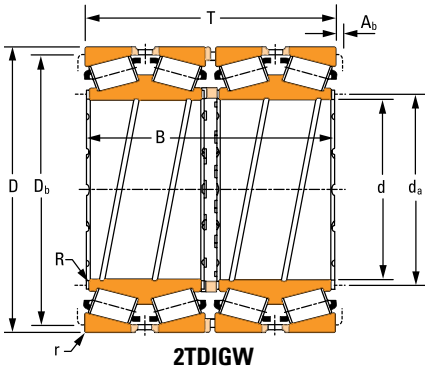

2TDIGW

Bearing Part No.			Design Type	Cage Type[1]	Mounting Dimensions					Weight
Double Cone	Single Cup	Double Cup			Max. Shaft Radius R	Cone Backing Diameter d_a	Max. Housing Radius r	Cup Backing Diameter D_b	Axial Cage Clearance A_b	
					mm in.	**mm** in.	**mm** in.	**mm** in.	**mm** in.	**kg** lbs.
NP195018	NP069789	–	2TDIGW	S	**3.0** 0.12	**516.0** 20.31	**4.0** 0.16	**597.0** 23.50	**0.0** 0.00	**281** 620
NP090602	NP872793	NP666081	TQOW	P	**8.0** 0.32	**546.0** 21.50	**8.0** 0.32	**669.0** 26.34	**8.7** 0.34	**571** 1260
JLM275049DW	JLM275010	JLM275010D	TQOW	S	**5.0** 0.20	**537.0** 21.14	**5.0** 0.20	**681.0** 26.81	**9.2** 0.36	**610** 1345
NP281701	NP289130	NP281709	TQOW	P	**10.0** 0.39	**558.0** 21.97	**10.0** 0.39	**765.0** 30.12	**15.9** 0.63	**1385** 3053
EE641198D	641265	641266D	TQO	P	**3.3** 0.13	**530.0** 20.87	**6.4** 0.25	**636.0** 25.04	**17.5** 0.69	**396** 866
M274149DW	M274110	M274110D	TQOW	P	**3.3** 0.13	**534.0** 21.02	**6.4** 0.25	**663.0** 26.10	**14.9** 0.58	**692** 1526
LM274049DW	LM274010	LM274010D	TQOW	P	**3.3** 0.13	**537.0** 21.12	**6.0** 0.24	**654.0** 25.75	**11.1** 0.44	**474** 1044
EE531201D	531300	531301XD	TQO	P	**6.4** 0.25	**550.7** 21.68	**6.4** 0.25	**710.9** 27.99	**11.7** 0.46	**747** 1647
NP907899	NP385281	–	2TDIGW	S	**1.6** 0.06	**531.0** 20.91	**6.6** 0.26	**624.0** 24.57	**10.8** 0.42	**312** 687
NP486537	NP163840	NP238499	TQOGW	P	**6.4** 0.25	**552.0** 21.73	**9.0** 0.35	**675.0** 26.57	**12.7** 0.50	**733** 1615
LM274449DGW	LM274410	LM274410D	TQOGW	P	**3.3** 0.13	**540.0** 21.26	**6.4** 0.25	**636.0** 25.04	**7.1** 0.28	**394** 869
M275349DGW	M275310	–	2TDIGW	P	**3.3** 0.13	**552.0** 21.73	**6.4** 0.25	**684.0** 26.93	**17.4** 0.68	**772** 1703
LM275349D	LM275310	–	2TDI	P	**3.3** 0.13	**549.0** 21.61	**6.4** 0.25	**672.0** 26.46	**12.4** 0.48	**476** 1049
NP827555	NP083259	NP590779	TQOW	P	**7.5** 0.30	**588.0** 23.15	**7.5** 0.30	**798.0** 31.42	**14.1** 0.55	**1400** 3086
M276449DGW	M276410	M276410CD	TQOGW	P	**3.3** 0.13	**564.0** 22.20	**6.4** 0.25	**711.0** 27.99	**11.8** 0.46	**844** 1861

[1]Cage type: S – Stamped steel, P – Pin type.

Continued on next page.

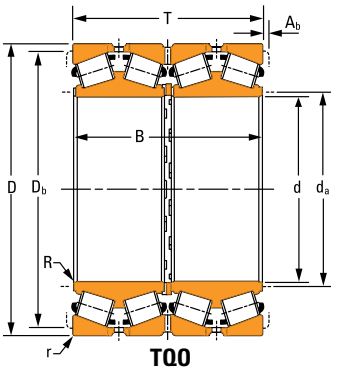

TQO

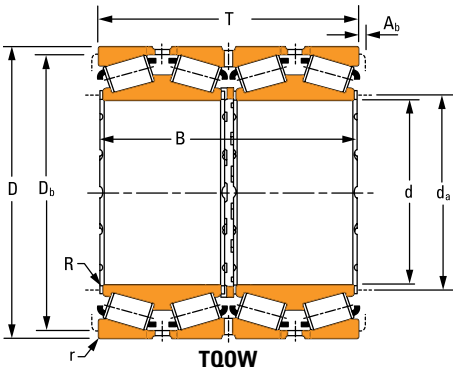

TQOW

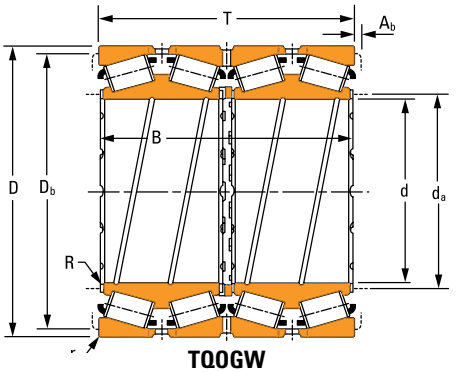

TQOGW

TABLE 53. TQOW – 2TDIW PRODUCT DATA *– continued*

Bearing Dimensions				Load Ratings							
				One Million Revolutions				90 Million Revolutions			
Bore d	O.D. D	Width over Cups T	Width over Cones B	Dynamic Radial $C_{1(4)}$	e	Y_1	Y_2	Dynamic Radial C_{90}	Dynamic Axial C_{a90}	Dynamic Radial $C_{90(4)}$	K Factor
mm in.	**mm** in.	**mm** in.	**mm** in.	**kN** lbf				**kN** lbf	**kN** lbf	**kN** lbf	
540.000 21.2598	**690.000** 27.1654	**400.000** 15.7480	**400.000** 15.7480	**9260** 2080000	0.33	2.03	3.03	**689** 155000	**392** 88200	**2400** 540000	1.76
558.800 22.0000	**736.600** 29.0000	**322.268** 12.6877	**322.265** 12.6876	**7200** 1620000	0.34	1.96	2.92	**536** 121000	**315** 70700	**1868** 420000	1.70
558.800 22.0000	**736.600** 29.0000	**409.575** 16.1250	**409.575** 16.1250	**8960** 2020000	0.35	1.95	2.91	**667** 150000	**395** 88800	**2320** 522000	1.69
558.800 22.0000	**736.600** 29.0000	**457.200** 18.0000	**455.613** 17.9375	**10300** 2320000	0.33	2.03	3.03	**766** 172000	**436** 98100	**2660** 600000	1.76
560 22.0472	**700** 27.5591	**405** 15.9449	**405** 15.9449	**8480** 1908000	0.33	2.03	3.03	**632** 142000	**360** 80900	**2200** 494000	1.76
560 22.0472	**920** 36.2205	**620** 24.4094	**620** 24.4094	**19000** 4260000	0.39	1.72	2.56	**1410** 318000	**949** 213000	**4920** 1106000	1.49
571.500 22.5000	**812.800** 32.0000	**593.725** 23.3750	**593.725** 23.3750	**15780** 3540000	0.33	2.03	3.03	**1180** 264000	**669** 150000	**4100** 920000	1.76
584.200 23.0000	**730.250** 28.7500	**349.250** 13.7500	**342.900** 13.5000	**7520** 1688000	0.43	1.57	2.34	**559** 126000	**412** 92600	**1948** 438000	1.36
584.200 23.0000	**762.000** 30.0000	**401.638** 15.8125	**396.874** 15.6250	**8440** 1898000	0.47	1.43	2.13	**628** 141000	**509** 114000	**2180** 492000	1.24
584.200 23.0000	**901.700** 35.5000	**539.747** 21.2499	**484.979** 19.0937	**17340** 3900000	0.33	2.03	3.03	**1290** 290000	**732** 165000	**4500** 1010000	1.76
584.200 23.0000	**901.700** 35.5000	**539.747** 21.2499	**523.080** 20.5937	**16320** 3660000	0.33	2.03	3.03	**1210** 273000	**689** 155000	**4240** 952000	1.76
585.788 23.0625	**771.525** 30.3750	**479.425** 18.8750	**479.425** 18.8750	**11460** 2580000	0.33	2.03	3.03	**853** 192000	**486** 109000	**2980** 668000	1.76
595.312 23.4375	**844.550** 33.2500	**615.950** 24.2500	**615.950** 24.2500	**16940** 3800000	0.33	2.03	3.03	**1260** 283000	**718** 161000	**4400** 988000	1.76
600 23.6220	**800** 31.4961	**365** 14.3700	**365** 14.3700	**8580** 1930000	0.39	1.71	2.54	**639** 144000	**433** 97300	**2220** 500000	1.48
603.250 23.7500	**857.250** 33.7500	**622.300** 24.5000	**622.300** 24.5000	**17480** 3920000	0.33	2.03	3.03	**1300** 292000	**741** 166000	**4520** 1018000	1.76

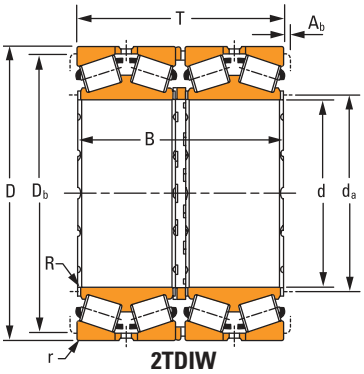

2TDIW

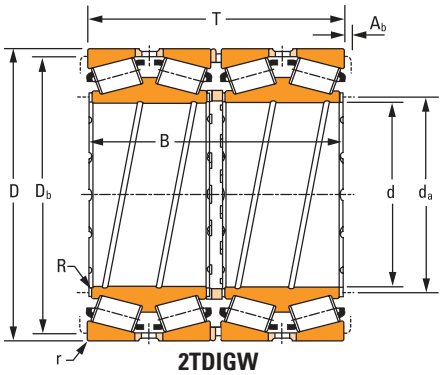

2TDIGW

Bearing Part No.			Design Type	Cage Type[1]	Mounting Dimensions					Weight
Double Cone	Single Cup	Double Cup			Max. Shaft Radius R	Cone Backing Diameter d_a	Max. Housing Radius r	Cup Backing Diameter D_b	Axial Cage Clearance A_b	
					mm in.	**mm** in.	**mm** in.	**mm** in.	**mm** in.	**kg** lbs.
NP793712	NP679160	NP680585	TQOGW	P	**3.0** 0.12	**564.0** 22.20	**6.0** 0.24	**654.0** 25.75	**11.3** 0.44	**369** 814
EE843220DW	843290	843291CD	TQOW	P	**3.3** 0.13	**585.0** 23.03	**6.4** 0.25	**699.0** 27.52	**13.6** 0.53	**373** 822
LM377449DW	LM377410	LM377410CD	TQOW	P	**3.3** 0.13	**588.0** 23.15	**6.4** 0.25	**696.0** 27.40	**11.9** 0.47	**482** 1062
LM277149DA	LM277110	LM277110D	TQO	P	**3.3** 0.13	**588.0** 23.15	**6.4** 0.25	**696.0** 27.40	**15.9** 0.63	**533** 1174
NP296291	NP203938	NP209728	TQOW	S	**3.0** 0.12	**585.0** 23.03	**5.0** 0.20	**666.0** 26.22	**5.1** 0.20	**355** 782
NP460735	NP301398	NP028523	TQOW	P	**10.0** 0.39	**624.0** 24.57	**10.0** 0.39	**846.0** 33.31	**14.3** 0.56	**1695** 3739
M278749DGW	M278710	M278710CD	TQOGW	P	**3.3** 0.13	**609.0** 23.98	**6.4** 0.25	**756.0** 29.76	**12.2** 0.48	**1026** 2263
NP814067	NP695713 NP712077	–	2TDIGW	S	**1.5** 0.06	**606.0** 23.86	**3.3** 0.13	**699.0** 27.52	**3.2** 0.13	**328** 723
LM778549DGW	LM778510	–	2TDIGW	S	**3.3** 0.13	**615.0** 24.21	**6.4** 0.25	**717.0** 28.23	**7.9** 0.31	**465** 1026
662300D	663550	663551D	TQO	P	**3.3** 0.13	**624.0** 24.57	**9.7** 0.38	**843.0** 33.19	**7.6** 0.30	**1185** 2613
EE665231D	665355	665356D	TQO	P	**3.3** 0.13	**624.0** 24.57	**9.7** 0.38	**843.0** 33.19	**6.8** 0.27	**1290** 2845
LM278849DGW	LM278810	–	2TDIGW	P	**3.3** 0.13	**615.0** 24.21	**6.4** 0.25	**726.0** 28.58	**12.2** 0.47	**615** 1356
M280049DW	M280010	–	2TDIW	P	**3.3** 0.13	**633.0** 24.92	**6.4** 0.25	**786.0** 30.94	**18.5** 0.72	**1148** 2531
NP047309	NP910908	NP561503	TQOW	P	**6.0** 0.24	**633.0** 24.92	**6.0** 0.24	**755.0** 29.72	**10.3** 0.40	**498** 1098
M280249DGWA	M280210	–	2TDIGW	P	**3.3** 0.13	**642.0** 25.28	**6.4** 0.25	**798.0** 31.42	**15.4** 0.60	**1194** 2631

[1]Cage type: S – Stamped steel, P – Pin type.

Continued on next page.

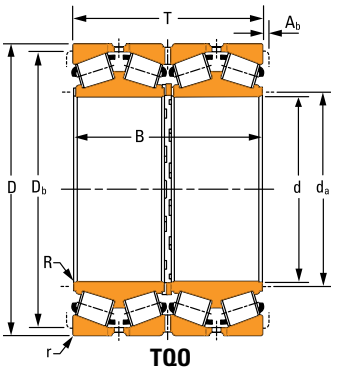

TQO

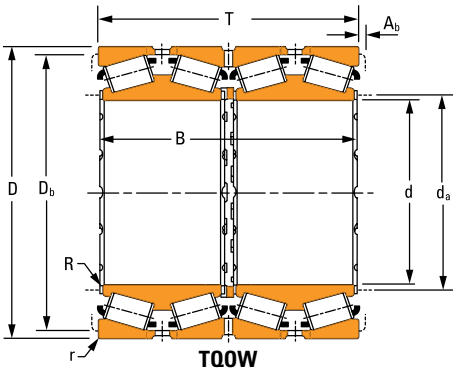

TQOW

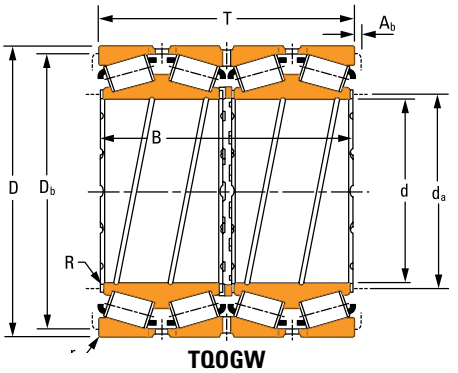

TQOGW

TABLE 53. TQOW – 2TDIW PRODUCT DATA *– continued*

Bearing Dimensions				Load Ratings							
				One Million Revolutions				90 Million Revolutions			
Bore d	O.D. D	Width over Cups T	Width over Cones B	Dynamic Radial $C_{1(4)}$	e	Y_1	Y_2	Dynamic Radial C_{90}	Dynamic Axial C_{a90}	Dynamic Radial $C_{90(4)}$	K Factor
mm in.	**mm** in.	**mm** in.	**mm** in.	**kN** lbf				**kN** lbf	**kN** lbf	**kN** lbf	
609.600 24.0000	**787.400** 31.0000	**361.950** 14.2500	**361.950** 14.2500	**9100** 2040000	0.37	1.82	2.72	**677** 152000	**430** 96600	**2360** 530000	1.58
609.600 24.0000	**813.562** 32.0300	**479.425** 18.8750	**479.425** 18.8750	**11700** 2620000	0.33	2.03	3.03	**871** 196000	**496** 111000	**3040** 682000	1.76
609.600 24.0000	**863.600** 34.0000	**660.400** 26.0000	**660.400** 26.0000	**21000** 4740000	0.33	2.03	3.03	**1570** 353000	**893** 201000	**5460** 1228000	1.76
620 24.4094	**800** 31.4961	**363.5** 14.3110	**363.5** 14.3110	**8780** 1972000	0.33	2.04	3.04	**653** 147000	**369** 83000	**2280** 512000	1.77
625.000 24.6063	**815.000** 32.0866	**480.000** 18.8976	**480.000** 18.8976	**12040** 2700000	0.34	2.01	2.99	**896** 201000	**516** 116000	**3120** 702000	1.74
630 24.8031	**850** 33.4646	**418** 16.4567	**418** 16.4567	**10060** 2260000	0.40	1.70	2.53	**748** 168000	**510** 115000	**2600** 586000	1.47
630 24.8031	**850** 33.4645	**422** 16.6142	**422** 16.6142	**11700** 2620000	0.40	1.68	2.51	**871** 196000	**596** 134000	**3040** 682000	1.46
630 24.8031	**920** 36.2205	**513.5** 20.2165	**513.5** 20.2165	**17540** 3940000	0.30	2.24	3.34	**1310** 293000	**672** 151000	**4540** 1022000	1.94
630.159 24.8094	**630.160** 24.8094	**849.875** 24.8094	**515.000** 20.2756	**16160** 3640000	0.33	2.03	3.03	**1200** 270000	**685** 154000	**4180** 942000	1.76
635.000 25.0000	**901.700** 35.5000	**654.050** 25.7500	**654.050** 25.7500	**19120** 4300000	0.33	2.03	3.03	**1420** 320000	**810** 182000	**4960** 1114000	1.76
646.112 25.4375	**857.250** 33.7500	**542.925** 21.3750	**542.925** 21.3750	**16360** 3680000	0.33	2.03	3.03	**1220** 274000	**694** 156000	**4240** 954000	1.76
647.700 25.5000	**1028.700** 40.5000	**565.150** 22.2500	**558.800** 22.0000	**19520** 4380000	0.31	2.15	3.20	**1450** 327000	**782** 176000	**5060** 1138000	1.86
649.920 25.5874	**1029.950** 40.5492	**560.000** 22.0472	**560.000** 22.0472	**20000** 4500000	0.36	1.89	2.82	**1490** 335000	**910** 205000	**5180** 1166000	1.64
649.925 25.5876	**914.898** 36.0196	**674.000** 26.5354	**672.000** 26.4560	**20200** 4540000	0.33	2.03	3.03	**1500** 338000	**855** 192000	**5240** 1176000	1.76
657.225 25.8750	**933.450** 36.7500	**676.275** 26.6250	**676.274** 26.6240	**20400** 4580000	0.33	2.03	3.03	**1520** 342000	**865** 195000	**5300** 1190000	1.76

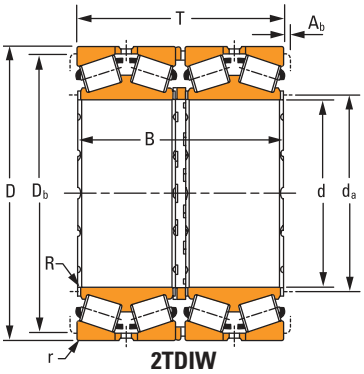

2TDIW

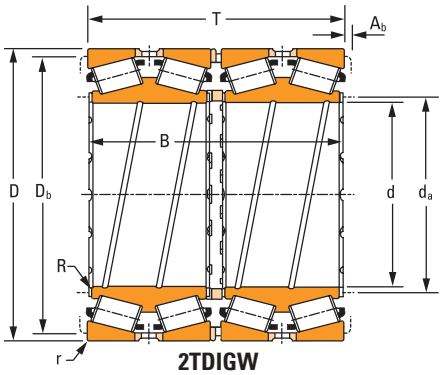

2TDIGW

Bearing Part No.			Design Type	Cage Type[1]	Mounting Dimensions					Weight
Double Cone	Single Cup	Double Cup			Max. Shaft Radius R	Cone Backing Diameter d_a	Max. Housing Radius r	Cup Backing Diameter D_b	Axial Cage Clearance A_b	
					mm in.	**mm** in.	**mm** in.	**mm** in.	**mm** in.	**kg** lbs.
EE649242DGW	649310	649311CD	TQOGW	P	**6.4** 0.25	**641.4** 25.25	**6.4** 0.25	**747.0** 29.41	**12.6** 0.49	**466** 1027
LM280249DGW	LM280210	LM280210D	TQOGW	P	**3.0** 0.12	**639.0** 25.16	**6.4** 0.25	**771.0** 30.35	**10.9** 0.43	**703** 1551
M280349D	M280310	M280310D	TQO	P	**3.3** 0.13	**648.0** 25.51	**6.4** 0.25	**807.0** 31.77	**5.4** 0.21	**1243** 2740
NP608180	NP961612	NP975169	TQOW	S	**3.0** 0.12	**648.0** 25.51	**6.0** 0.24	**760.0** 29.92	**8.1** 0.32	**448** 987
NP472983	NP261943	–	2TDIW	P	**3.3** 0.13	**657.0** 25.87	**6.4** 0.25	**746.0** 29.37	**6.2** 0.24	**673** 1485
NP143337	JL580914	NP660239	TQOW	S	**6.0** 0.24	**660.0** 25.98	**6.0** 0.24	**801.0** 31.54	**6.1** 0.24	**666** 1469
NP935150	NP938292	NP970384	TQOW	P	**10.0** 0.39	**669.0** 26.34	**10.0** 0.39	**798.0** 31.42	**13.3** 0.52	**700** 1543
NP491603	NP180839	NP625919	TQOW	P	**10.0** 0.39	**681.0** 26.81	**10.0** 0.39	**864.0** 34.02	**16.2** 0.63	**1160** 2557
NP122947	NP695979	–	2TDIW	P	**6.4** 0.25	**666.0** 26.22	**6.4** 0.25	**804.0** 31.65	**6.4** 0.25	**842** 1857
M281049DGW	M281010	M281010CD	TQOGW	P	**3.3** 0.13	**675.0** 26.57	**6.4** 0.25	**843.0** 33.19	**17.5** 0.69	**1387** 3058
LM281049DGW	LM281010	–	2TDIGW	P	**3.3** 0.13	**678.0** 26.69	**6.4** 0.25	**810.0** 31.89	**16.7** 0.65	**877** 1934
EE424257D	424405	424407D	TQO	P	**11.0** 0.43	**713.5** 28.09	**6.4** 0.25	**960.0** 37.80	**17.4** 0.68	**1795** 3958
NP208198	NP202675	–	2TDIW	P	**10.0** 0.39	**723.0** 28.46	**15.0** 0.59	**948.0** 37.32	**9.5** 0.37	**1903** 4195
M281349DW	M281310	M281310D	TQOW	P	**3.5** 0.14	**690.0** 27.17	**6.0** 0.24	**855.0** 33.66	**14.0** 0.55	**1440** 3174
M281649DW	M281610	M281610CD	TQOW	P	**3.3** 0.13	**699.0** 27.52	**6.4** 0.25	**870.0** 34.25	**23.9** 0.94	**1537** 3389

[1]Cage type: S – Stamped steel, P – Pin type.

Continued on next page.

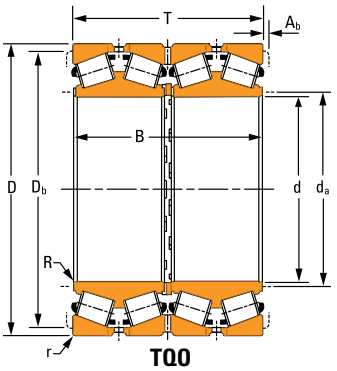

TQO

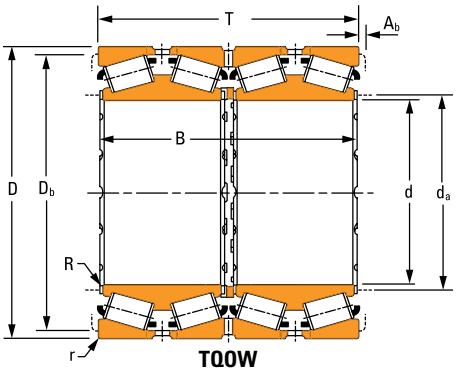

TQOW

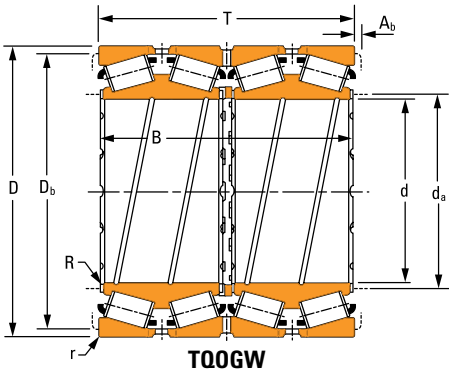

TQOGW

TABLE 53. TQOW – 2TDIW PRODUCT DATA *– continued*

Bearing Dimensions					Load Ratings							
					One Million Revolutions				90 Million Revolutions			
Bore d	O.D. D	Width over Cups T	Width over Cones B	d_1 (2TDIGWE)	Dynamic Radial $C_{1(4)}$	e	Y_1	Y_2	Dynamic Radial C_{90}	Dynamic Axial C_{a90}	Dynamic Radial $C_{90(4)}$	K Factor
mm in.	**mm** in.	**mm** in.	**mm** in.	**mm** in.	**kN** lbf				**kN** lbf	**kN** lbf	**kN** lbf	
659.925 25.9813	**854.923** 33.6584	**318.480** 12.5386	**319.190** 12.5665	–	**7800** 1754000	0.35	1.92	2.85	**581** 131000	**349** 78600	**2020** 454000	1.66
659.925 25.9813	**1069.900** 42.1220	**648.002** 25.5119	**648.002** 25.5119	–	**22800** 5120000	0.31	2.18	3.25	**1690** 381000	**898** 202000	**5900** 1326000	1.89
660.400 26.0000	**812.800** 32.0000	**365.125** 14.3750	**365.126** 14.3750	–	**9520** 2140000	0.33	2.03	3.03	**709** 159000	**404** 90700	**2460** 556000	1.76
676 26.6142	**910** 35.8268	**620** 24.4095	**620** 24.4095	–	**18200** 4100000	0.37	1.82	2.72	**1350** 305000	**857** 193000	**4720** 1060000	1.58
679.450 26.7500	**901.700** 35.5000	**552.450** 21.7500	**552.450** 21.7500	–	**17480** 3920000	0.33	2.03	3.03	**1300** 292000	**741** 166000	**4520** 1018000	1.76
682.625 26.8750	**965.200** 38.0000	**701.675** 27.6250	**701.675** 27.6250	–	**1620** 364000	0.33	2.03	3.03	**1620** 364000	**921** 207000	**5640** 1268000	1.76
685.800 27.0000	**876.300** 34.5000	**355.600** 14.0000	**352.425** 13.8750	–	**9580** 2160000	0.42	1.61	2.41	**714** 160000	**508** 114000	**2480** 558000	1.40
704.850 27.7500	**914.400** 36.0000	**552.450** 21.7500	**552.449** 21.7490	–	**14640** 3300000	0.43	1.57	2.34	**1090** 245000	**803** 181000	**3800** 854000	1.36
708.025 27.8750	**930.275** 36.6250	**565.150** 22.2500	**565.150** 22.2500	–	**16120** 3620000	0.33	2.03	3.03	**1200** 270000	**684** 154000	**4180** 940000	1.76
709.925 27.9498	**899.925** 35.4301	**410.000** 16.1417	**410.000** 16.1417	–	**9980** 2240000	0.53	1.28	1.91	**743** 167000	**667** 150000	**2580** 582000	1.11
711.200 28.0000	**914.400** 36.0000	**317.500** 12.5000	**317.500** 12.5000	–	**8300** 1868000	0.38	1.78	2.65	**619** 139000	**403** 90600	**2160** 484000	1.54
711.200 28.0000	**914.400** 36.0000	**317.500** 12.5000	**425.450** 16.7500	**775.970** 30.5500	**8740** 1964000	0.38	1.79	2.66	**651** 146000	**421** 94600	**2260** 510000	1.55
714.375 28.1250	**1016.000** 40.0000	**704.850** 27.7500	**704.850** 27.7500	–	**22400** 5040000	0.35	1.92	2.85	**1670** 376000	**1000** 226000	**5820** 1308000	1.66
717.550 28.2500	**946.150** 37.2500	**565.150** 22.2500	**565.150** 22.2500	–	**18620** 4180000	0.33	2.03	3.03	**1390** 312000	**790** 178000	**4820** 1086000	1.76
730 28.7402	**940** 37.0079	**500** 19.6850	**500** 19.6850	–	**15500** 3480000	0.35	1.95	2.91	**1150** 259000	**684** 154000	**4020** 904000	1.69

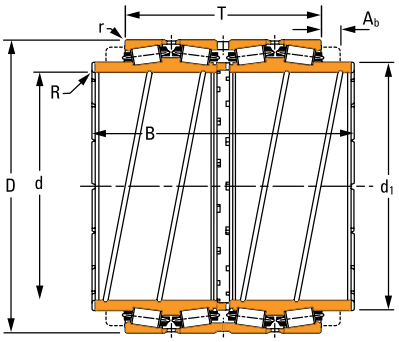

TQOGWE

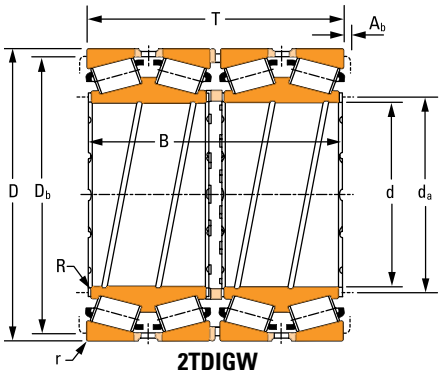

2TDIGW

Bearing Part No.			Design Type	Cage Type[1]	Mounting Dimensions					Weight
Double Cone	Single Cup	Double Cup			Max. Shaft Radius R	Cone Backing Diameter d_a	Max. Housing Radius r	Cup Backing Diameter D_b	Axial Cage Clearance A_b	
					mm in.	mm in.	mm in.	mm in.	mm in.	kg lbs.
EE749259DW	749334	749335CD	TQOW	P	**4.8** 0.19	**693.0** 27.28	**9.7** 0.38	**807.0** 31.77	**11.3** 0.45	**468** 1039
EE428263D	428423	428423D	TQO	P	**6.0** 0.24	**717.0** 28.23	**10.0** 0.39	**990.0** 38.98	**10.0** 0.39	**2338** 5155
L281149DGW	L281110	L281110CD	TQOGW	P	**3.3** 0.13	**682.8** 26.88	**6.4** 0.25	**777.0** 30.59	**14.1** 0.56	**416** 916
NP992335	NP339560	NP786396	TQOGW	P	**4.0** 0.16	**717.0** 28.23	**7.5** 0.30	**849.0** 33.43	**11.9** 0.47	**1200** 2645
LM281849DW	LM281810	LM281810CD	TQOW	P	**3.3** 0.13	**714.0** 28.11	**6.4** 0.25	**852.0** 33.54	**16.7** 0.66	**1000** 2204
M282249D	M282210	M282210CD	TQO	P	**3.3** 0.13	**723.0** 28.46	**6.4** 0.25	**900.0** 35.43	**16.8** 0.66	**1718** 3787
EE655271DGW	655345	–	2TDIGW	P	**3.3** 0.13	**717.0** 28.23	**6.4** 0.25	**831.0** 32.72	**16.4** 0.65	**545** 1202
LM682342DGW	LM682315	LM682315CD	TQOW	P	**3.3** 0.13	**741.0** 29.17	**6.4** 0.25	**867.0** 34.13	**18.6** 0.73	**967** 2131
LM282549DW	LM282510	LM282510D	TQOW	P	**3.3** 0.13	**741.0** 29.17	**6.4** 0.25	**879.0** 34.61	**16.2** 0.64	**1061** 2339
L882449DGW	L882410	L882410CD	TQOGW	P	**3.3** 0.13	**741.0** 29.17	**6.4** 0.25	**852.0** 33.54	**10.8** 0.42	**638** 1406
EE755281DGW	755360	–	2TDIGW	P	**3.3** 0.13	**744.0** 29.29	**6.4** 0.25	**873.0** 34.37	**13.5** 0.53	**536** 1183
NP058834	NP722126	NP830847	TQOGWE	P	**8.0** 0.31	**753.0** 29.65	**6.8** 0.27	**879.0** 34.61	**13.4** 0.53	**572** 1260
M383240DGW	M383210	M383210D	TQOGW	P	**3.3** 0.13	**759.0** 29.88	**6.4** 0.25	**948.0** 37.32	**19.8** 0.78	**1901** 4191
LM282847DW	LM282810	LM282810D	TQOW	P	**3.3** 0.13	**753.0** 29.65	**6.4** 0.25	**894.0** 35.20	**15.9** 0.63	**1117** 2462
NP580440	NP337315	–	2TDIGW	P	**3.5** 0.14	**765.0** 30.12	**8.0** 0.31	**894.0** 35.20	**13.6** 0.53	**880** 1941

[1]Cage type: S – Stamped steel, P – Pin type.

Continued on next page.

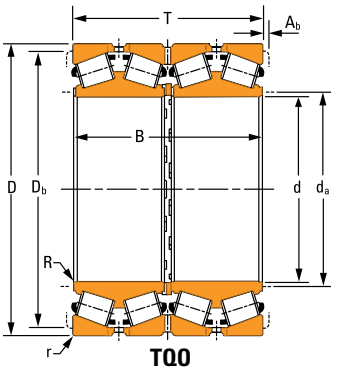

TQO

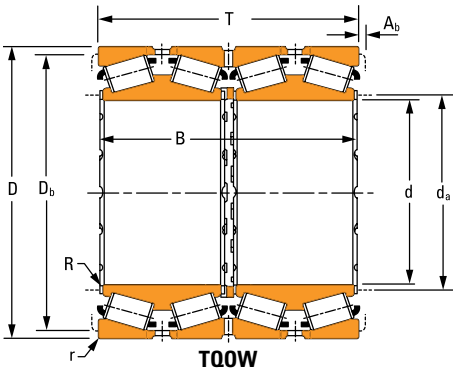

TQOW

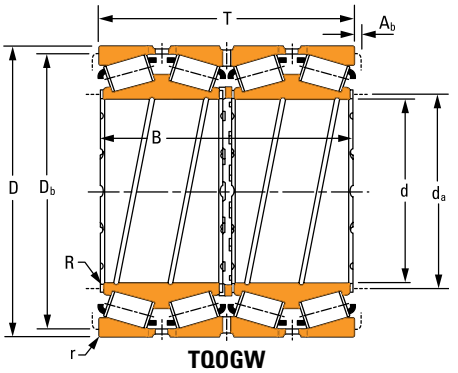

TQOGW

TABLE 53. TQOW – 2TDIW PRODUCT DATA *– continued*

Bearing Dimensions				Load Ratings							
				One Million Revolutions				90 Million Revolutions			
Bore d	O.D. D	Width over Cups T	Width over Cones B	Dynamic Radial $C_{1(4)}$	e	Y_1	Y_2	Dynamic Radial C_{90}	Dynamic Axial C_{a90}	Dynamic Radial $C_{90(4)}$	K Factor
mm in.	**mm** in.	**mm** in.	**mm** in.	**kN** lbf				**kN** lbf	**kN** lbf	**kN** lbf	
730.000 28.7402	**1090.000** 42.9134	**660.000** 25.9843	**660.000** 25.9843	**26200** 5880000	0.33	2.03	3.03	**1950** 438000	**1110** 249000	**6780** 1524000	1.76
730.250 28.7500	**1035.050** 40.7500	**755.650** 29.7500	**755.650** 29.7500	**24800** 5580000	0.33	2.03	3.03	**1850** 416000	**1050** 237000	**6440** 1448000	1.76
749.300 29.5000	**990.600** 39.0000	**605.000** 23.8189	**605.000** 23.8189	**20800** 4680000	0.33	2.03	3.03	**1550** 349000	**883** 198000	**5400** 1214000	1.76
749.300 29.5000	**1066.800** 42.0000	**736.600** 29.0000	**723.900** 28.5000	**24800** 5580000	0.33	2.04	3.04	**1850** 415000	**1040** 234000	**6440** 1446000	1.77
749.300 29.5000	**1130.300** 44.5000	**685.800** 27.0000	**685.800** 27.0000	**24000** 5380000	0.49	1.38	2.06	**1780** 400000	**1490** 334000	**6200** 1394000	1.20
749.300 29.5000	**1181.100** 46.5000	**736.600** 29.0000	**736.600** 29.0000	**26000** 5840000	0.37	1.80	2.68	**1930** 434000	**1240** 278000	**6720** 1512000	1.56
750 29.5276	**950** 37.4016	**410** 16.1417	**410** 16.1417	**12720** 2860000	0.35	1.92	2.85	**947** 213000	**569** 128000	**3300** 742000	1.66
750 29.5276	**1220** 48.0315	**840** 33.0709	**840** 33.0709	**39000** 8740000	0.32	2.11	3.15	**2900** 651000	**1580** 355000	**10080** 2260000	1.83
762.000 30.0000	**1028.700** 40.5000	**565.150** 22.2500	**558.800** 22.0000	**20800** 4660000	0.31	2.15	3.20	**1550** 348000	**831** 187000	**5380** 1210000	1.86
762.000 30.0000	**1066.800** 42.0000	**736.600** 29.0000	**723.900** 28.5000	**24600** 5520000	0.33	2.03	3.03	**1830** 411000	**1040** 234000	**6360** 1430000	1.76
762.000 30.0000	**1079.500** 42.5000	**787.400** 31.0000	**787.400** 31.0000	**26800** 6020000	0.33	2.03	3.03	**1990** 448000	**1130** 255000	**6940** 1560000	1.76
762.000 30.0000	**1219.200** 48.0000	**812.800** 32.0000	**803.275** 31.6250	**30200** 6780000	0.36	1.89	2.82	**2240** 504000	**1360** 307000	**7800** 1756000	1.64
762.000 30.0000	**1295.400** 51.0000	**647.700** 25.5000	**647.700** 25.5000	**26000** 5820000	0.38	1.75	2.61	**1930** 434000	**1270** 285000	**6720** 1510000	1.52
774.700 30.5000	**1219.873** 48.0265	**838.474** 33.0108	**838.474** 33.0108	**31000** 6960000	0.39	1.72	2.56	**2310** 519000	**1550** 347000	**8040** 1806000	1.49
785 30.9055	**1020** 40.1575	**600** 23.6220	**600** 23.6220	**21000** 4700000	0.35	1.95	2.91	**1560** 351000	**921** 207000	**5420** 1220000	1.69

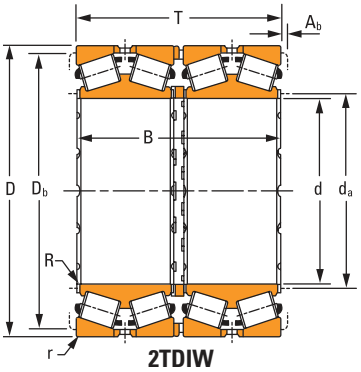

2TDIW

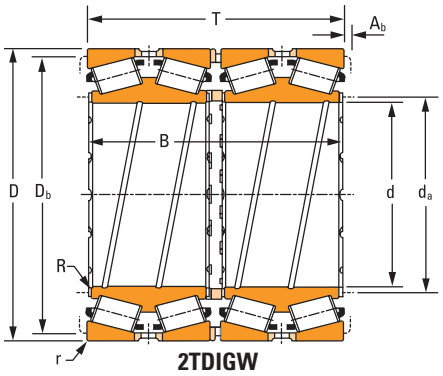

2TDIGW

Bearing Part No.			Design Type	Cage Type[1]	Mounting Dimensions					Weight
Double Cone	Single Cup	Double Cup			Max. Shaft Radius R	Cone Backing Diameter d_a	Max. Housing Radius r	Cup Backing Diameter D_b	Axial Cage Clearance A_b	
					mm in.	**mm** in.	**mm** in.	**mm** in.	**mm** in.	**kg** lbs.
NP957484	NP112712	–	2TDIW	P	**3.3** 0.13	**774.0** 30.47	**6.4** 0.25	**1020.0** 40.16	**18.2** 0.72	**2161** 4764
M283449DGW	M283410	–	2TDIGW	P	**3.3** 0.13	**774.0** 30.47	**6.4** 0.25	**966.0** 38.03	**18.8** 0.73	**2092** 4612
LM283649DGW	LM283610	–	2TDIGW	P	**3.3** 0.13	**786.0** 30.94	**6.4** 0.25	**936.0** 36.85	**16.2** 0.63	**1315** 2899
EE325296DGW	325420	325421XD	TQOGW	P	**12.7** 0.50	**806.5** 31.75	**12.7** 0.50	**996.0** 39.21	**16.7** 0.66	**2152** 4744
EE731296D	731445	731445D	TQO	P	**6.4** 0.25	**820.0** 32.28	**9.7** 0.38	**1045.0** 41.14	**14.4** 0.57	**2444** 5389
EE690296D	690465	690466XD	TQO	P	**6.4** 0.25	**813.0** 32.01	**12.7** 0.50	**1085.0** 42.72	**12.5** 0.49	**3020** 6657
NP037181	NP327704 NP426265	–	2TDIW	P	**6.0** 0.24	**786.0** 30.94	**6.0** 0.24	**909.0** 35.67	**9.9** 0.39	**718** 1582
NP476024	LM184015	NP483799	TQOW	P	**12.0** 0.47	**825.0** 32.48	**12.0** 0.47	**1130.0** 44.49	**21.7** 0.85	**4010** 8840
LM184043DW	M284111	LM184015CD	TQOW	P	**6.4** 0.25	**807.0** 31.77	**6.4** 0.25	**978.0** 38.50	**17.5** 0.69	**1378** 3039
M284148DGW	M284210	M284110D	TQOGW	P	**9.5** 0.37	**819.0** 32.24	**12.7** 0.50	**996.0** 39.21	**15.8** 0.62	**2114** 4661
M284249DGW	528480	M284210CD	TQOGW	P	**4.8** 0.19	**810.0** 31.89	**12.7** 0.50	**1005.0** 39.57	**19.7** 0.78	**2392** 5273
EE528300D	433512	528480D	TQO	P	**6.4** 0.25	**828.0** 32.60	**12.7** 0.50	**1125.0** 44.29	**16.3** 0.64	**3666** 8083
EE433301D	631484	433513XD	TQO	P	**6.4** 0.25	**852.0** 33.54	**6.4** 0.25	**1210.0** 47.64	**14.4** 0.56	**3622** 7985
EE631305D	NP583119	631483XD	TQO	P	**6.4** 0.25	**843.0** 33.19	**12.7** 0.50	**1125.0** 44.29	**0.0** 0.00	**3878** 8549
NP781149	M285810	–	2TDIW	P	**6.0** 0.24	**828.0** 32.60	**12.0** 0.47	**960.0** 37.80	**17.4** 0.68	**1304** 2873

[1]Cage type: S – Stamped steel, P – Pin type.

Continued on next page.

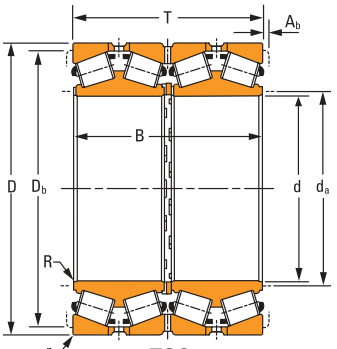

TQO

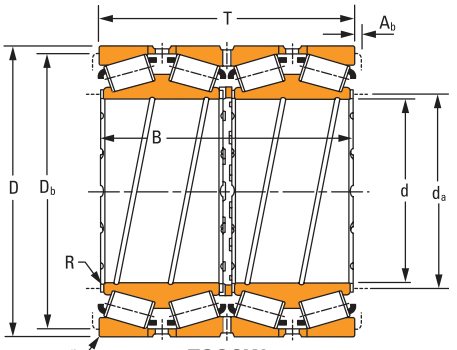

TQOGW

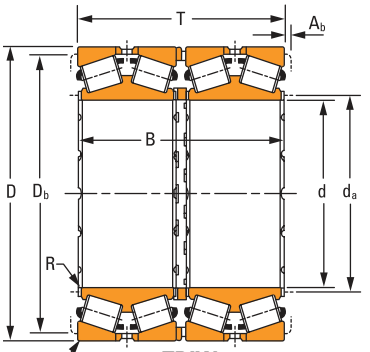

2TDIW

TABLE 53. TQOW – 2TDIW PRODUCT DATA *– continued*

Bearing Dimensions				Load Ratings							
				One Million Revolutions				90 Million Revolutions			
Bore d	O.D. D	Width over Cups T	Width over Cones B	Dynamic Radial $C_{1(4)}$	e	Y_1	Y_2	Dynamic Radial C_{90}	Dynamic Axial C_{a90}	Dynamic Radial $C_{90(4)}$	K Factor
mm in.	**mm** in.	**mm** in.	**mm** in.	**kN** lbf				**kN** lbf	**kN** lbf	**kN** lbf	
825.500 32.5000	**1168.400** 46.0000	**844.550** 33.2500	**844.550** 33.2500	**31200** 7000000	0.33	2.03	3.03	**2320** 521000	**1320** 297000	**8080** 1816000	1.76
863.600 34.0000	**1130.300** 44.5000	**669.925** 26.3750	**669.925** 26.3750	**26000** 5860000	0.33	2.03	3.03	**1940** 436000	**1100** 248000	**6760** 1518000	1.76
863.600 34.0000	**1181.100** 46.5000	**666.750** 26.2500	**666.750** 26.2500	**25000** 5600000	0.33	2.03	3.03	**1860** 418000	**1060** 238000	**6460** 1454000	1.76
863.600 34.0000	**1219.200** 48.0000	**889.000** 35.0000	**876.300** 34.5000	**38800** 8700000	0.33	2.03	3.03	**2880** 648000	**1640** 369000	**10040** 2260000	1.76
877.888 34.5625	**1219.873** 48.0265	**819.150** 32.2500	**819.150** 32.2500	**31000** 6960000	0.33	2.03	3.03	**2310** 518000	**1310** 295000	**8020** 1804000	1.76
901.700 35.5000	**1295.400** 51.0000	**914.400** 36.0000	**901.700** 35.5000	**39000** 8760000	0.34	2.01	2.99	**2900** 653000	**1670** 376000	**10100** 2280000	1.74
938.212 36.9375	**1270.000** 50.0000	**825.500** 32.5000	**825.500** 32.5000	**31800** 7140000	0.33	2.03	3.03	**2360** 532000	**1350** 303000	**8240** 1852000	1.76
939.800 37.0000	**1333.500** 52.5000	**952.500** 37.5000	**952.500** 37.5000	**39800** 8960000	0.33	2.03	3.03	**2970** 667000	**1690** 379000	**10320** 2320000	1.76
1000.897 39.4054	**1295.400** 51.0000	**763.999** 30.0787	**763.999** 30.0787	**28200** 6360000	0.33	2.03	3.03	**2100** 473000	**1200** 269000	**7320** 1648000	1.76
1070 42.1260	**1400** 55.1181	**890** 35.0394	**890** 35.0394	**41200** 9280000	0.33	2.03	3.03	**3070** 691000	**1750** 393000	**10700** 2400000	1.76
1139.825 44.8750	**1509.712** 59.4375	**923.925** 36.3750	**923.925** 36.3750	**49200** 11060000	0.33	2.03	3.03	**3660** 823000	**2080** 468000	**12760** 2860000	1.76
1200.150 47.2500	**1593.850** 62.7500	**990.600** 39.0000	**990.600** 39.0000	**47200** 10600000	0.33	2.03	3.03	**3510** 789000	**2000** 449000	**12220** 2740000	1.76
1346.200 53.0000	**1729.740** 68.1000	**1143.000** 45.0000	**1143.000** 45.0000	**56200** 12620000	0.28	2.42	3.61	**4180** 939000	**1990** 447000	**14560** 3280000	2.10

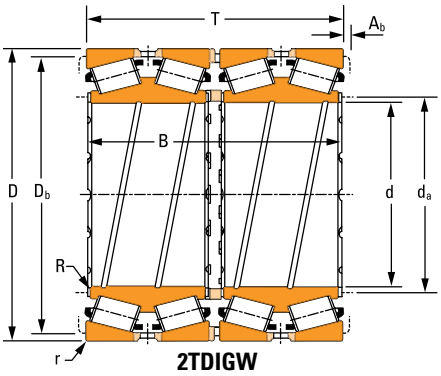

2TDIGW

Bearing Part No.			Design Type	Cage Type[1]	Mounting Dimensions					Weight
Double Cone	Single Cup	Double Cup			Max. Shaft Radius R	Cone Backing Diameter d_a	Max. Housing Radius r	Cup Backing Diameter D_b	Axial Cage Clearance A_b	
					mm in.	**mm** in.	**mm** in.	**mm** in.	**mm** in.	**kg** lbs.
M285848DGW	LM286210	M285810CD	TQOGW	P	**4.8** 0.19	**879.0** 34.61	**12.7** 0.50	**1085.0** 42.72	**20.2** 0.79	**3036** 6692
LM286248DGW	LM286410	–	2TDIGW	P	**4.8** 0.19	**906.0** 35.67	**12.7** 0.50	**1065.0** 41.93	**18.4** 0.72	**1835** 4045
LM286449D	547480	LM286410D	TQO	P	**4.8** 0.19	**909.0** 35.79	**12.7** 0.50	**1110.0** 43.70	**17.0** 0.66	**2247** 4953
EE547341DW	LM286711	–	2TDIW	P	**4.8** 0.19	**918.0** 36.14	**12.7** 0.50	**1135.0** 44.69	**16.3** 0.64	**3337** 7357
LM286749DGW	634510	–	2TDIGW	P	**4.8** 0.19	**930.0** 36.61	**12.7** 0.50	**1140.0** 44.88	**17.5** 0.69	**3041** 6705
EE634356D	LM287610	634510D	TQO	P	**4.8** 0.19	**960.0** 37.80	**12.7** 0.50	**1205.0** 47.44	**15.9** 0.63	**4119** 9081
LM287649DGW	LM287810	LM287610D	TQOGW	P	**4.8** 0.19	**990.0** 38.98	**12.7** 0.50	**1190.0** 46.85	**21.0** 0.83	**3158** 6961
LM287849DGW	LM288210	LM287810CD	TQOGW	P	**4.8** 0.19	**999.0** 39.33	**12.7** 0.50	**1240.0** 48.82	**16.0** 0.63	**4432** 9771
LM288245DW	JLM288410	–	2TDIW	P	**4.8** 0.19	**1050.0** 41.34	**12.7** 0.50	**1225.0** 48.23	**18.1** 0.71	**2669** 5884
JLM288449DW	NP354913	–	2TDIW	P	**5.0** 0.20	**1120.0** 44.09	**13.0** 0.51	**1320.0** 51.97	**9.8** 0.38	**3734** 8233
NP555508	LM288910	–	2TDIW	P	**4.8** 0.19	**1195.0** 47.05	**12.7** 0.50	**1430.0** 56.30	**16.3** 0.64	**4571** 10078
LM288949D	LM189217	LM288910D	TQO	P	**4.8** 0.19	**1260.0** 49.61	**12.7** 0.50	**1500.0** 59.06	**18.2** 0.71	**2745** 6051
LM189242DGA		–	2TDIGW	P	**4.8** 0.19	**1405.0** 55.31	**12.7** 0.50	**1645.0** 64.76	**18.2** 0.71	**7077** 15603

[1]Cage type: S – Stamped steel, P – Pin type.

SEALED ROLL NECK BEARINGS

Engineered for use in rolling mill roll neck applications with high-radial and axial load capacity. Timken four-row sealed tapered roller bearings (SRNB) offer reduced maintenance costs and extended bearing life.

Fig. 45. Sealed roll neck bearing.

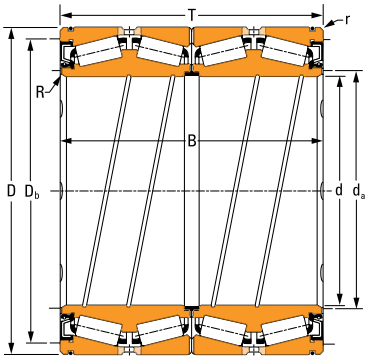

Fig. 46. Sealed roll neck bearing.

OVERALL DIMENSIONS:

d – Bore diameter

D – Outer diameter

T – Width over cups

B – Width over cones

R – Max. shaft radius

d_a – Cone backing diameter

r – Max. housing radius

D_b – Cup backing diameter

SEALED ROLL NECK BEARING DESIGN TYPES

INTEGRATED SEAL DESIGNS

SRNB-1

- Two double cones with front face lubrication slots.
- Four single cups.
- Two cup spacers with holes and lubrication slots.
- Two main seals (snap-in mounting).
- One bore seal.
- Two O-ring seals on cups.
- Spiral grooves on cone bore.

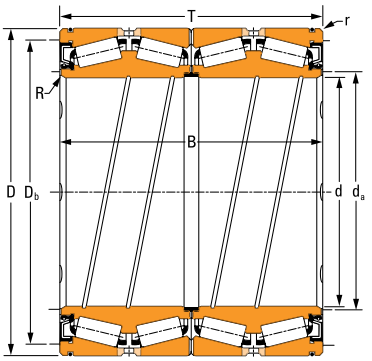

SRNB-1

SRNB-2

- Two double cones with front face lubrication slots.
- Four single cups.
- Two cup spacers with holes and lubrication slots.
- Two main seals (staked mounting).
- One bore seal.
- Two O-ring seals on cups.
- Spiral grooves on cone bore.

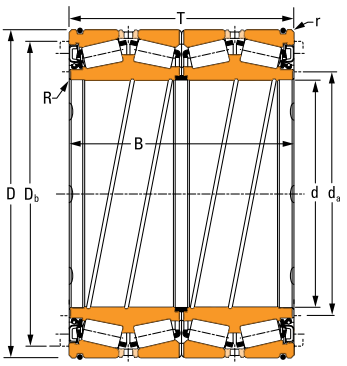

SRNB-2

SRNB-3

- Two double cones with front face lubrication slots.
- Four single cups.
- Two cup spacers with holes and lubrication slots.
- Two main seals with integrated seal lips at cup outer diameter.
- One bore seal.
- Spiral grooves on cone bore.

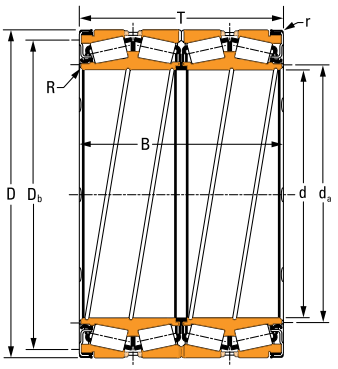

SRNB-3

SRNB-4

- Two double cones with front face lubrication slots.
- Four single cups.
- Two cup spacers with holes and lubrication slots.
- Two main seals (staked mounting).
- One bore seal inside the bearing.
- Two O-ring seals on cups.
- Spiral grooves on cone bore.
- Select sizes only.

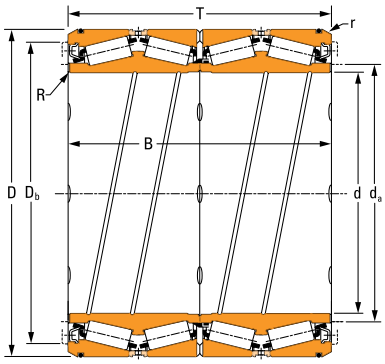

SRNB-4

SEAL CARRIER DESIGNS

SRNB-5

- Two double cones with front face lubrication slots.
- Four single cups.
- Two cup spacers with holes and lubrication slots.
- One bore seal.
- Two seal carriers including one main seal and one O-ring seal.
- Spiral grooves on cone bore.
- Active design type.

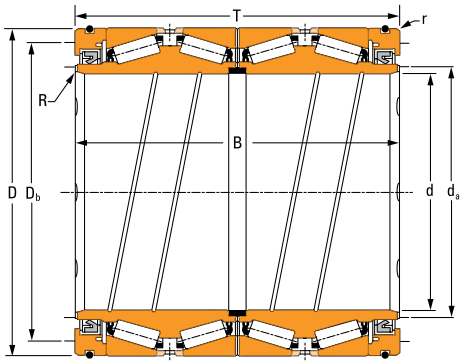

SRNB-5

Options for all figures (not illustrated):

- Central double cup and two single cups.
- Two solid cup spacers without holes and lubrication slots.

Note: The main seal is not interchangeable between the sealed roll neck bearings design types illustrated.

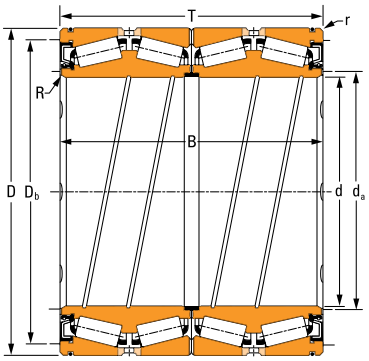

SRNB-1

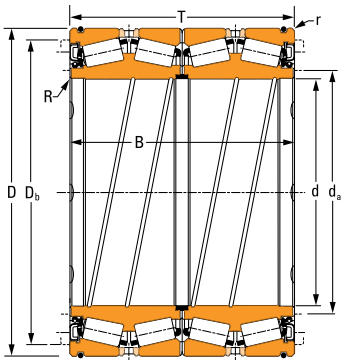

SRNB-2

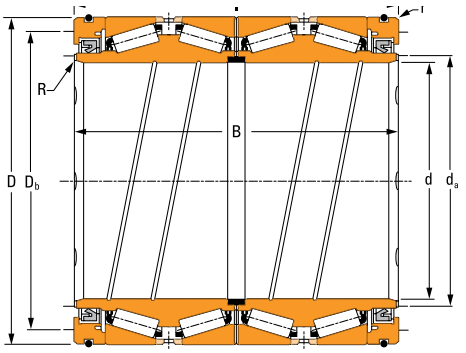

SRNB-5

TABLE 54. SRNB PRODUCT DATA

Bearing Dimensions				Load Ratings							
				One Million Revolutions				90 Million Revolutions			
Bore d	O.D. D	Width Over Cups T	Width Over Cones B	Dynamic Radial $C_{1(4)}$	e	Y_1	Y_2	Dynamic Radial C_{90}	Dynamic Axial C_{a90}	Dynamic Radial $C_{90(4)}$	K Factor
mm in.	**mm** in.	**mm** in.	**mm** in.	**kN** lbf				**kN** lbf	**kN** lbf	**kN** lbf	
195 7.6772	**270** 10.6300	**250** 9.8425	**250** 9.8425	**1560** 350000	0.49	1.38	2.06	**116** 26100	**97** 21800	**404** 90800	1.20
206.375 8.1250	**282.575** 11.1250	**190.500** 7.5000	**190.500** 7.5000	**1650** 370000	0.46	1.46	2.18	**123** 27600	**96** 21700	**428** 96200	1.27
220 8.6614	**295** 11.6142	**315** 12.4016	**315** 12.4016	**1844** 414000	0.37	1.81	2.70	**137** 30900	**88** 19700	**478** 107400	1.57
220 8.6614	**295** 11.6142	**315** 12.4016	**315** 12.4016	**2020** 456000	0.35	1.90	2.84	**151** 34000	**91** 20500	**526** 118200	1.65
220.663 8.6875	**314.325** 12.3750	**239.712** 9.4375	**239.712** 9.4375	**2080** 466000	0.40	1.67	2.49	**155** 34700	**106** 23900	**538** 121000	1.45
228.600 9.0000	**311.150** 12.2500	**200.025** 7.875	**200.025** 7.875	**1804** 406000	0.35	1.95	2.91	**134** 30200	**80** 17900	**468** 105200	1.69
240 9.4488	**320** 12.5984	**294** 11.5748	**294** 11.5748	**2660** 600000	0.32	2.10	3.13	**198** 44600	**109** 24500	**690** 155400	1.82
240 9.4488	**338** 13.3071	**340** 13.3858	**340** 13.3858	**3220** 724000	0.39	1.73	2.58	**240** 53900	**160** 35900	**836** 187800	1.50
241.478 9.5070	**349.148** 13.7460	**228.600** 9.0000	**228.600** 9.0000	**2680** 604000	0.36	1.89	2.82	**200** 45000	**122** 27500	**696** 156600	1.64
244.975 9.6447	**344.950** 13.5807	**310.000** 12.2047	**310.000** 12.2047	**2340** 524000	0.38	1.75	2.61	**174** 39100	**114** 25600	**606** 136000	1.52
244.975 9.6447	**344.950** 13.5807	**310.000** 12.2047	**310.000** 12.2047	**2340** 524000	0.38	1.75	2.61	**174** 39100	**114** 25600	**606** 136000	1.52
247.650 9.7500	**393.700** 15.5000	**269.875** 10.6250	**269.875** 10.6250	**3340** 754000	0.41	1.66	2.48	**249** 56100	**173** 38900	**868** 195200	1.44
254.000 10.0000	**358.775** 14.1250	**269.875** 10.6250	**269.875** 10.6250	**3200** 720000	0.37	1.82	2.72	**239** 53600	**151** 33900	**830** 186800	1.58
260 10.2362	**365** 14.3701	**340** 13.3858	**340** 13.3858	**3680** 828000	0.40	1.67	2.49	**274** 61600	**188** 42400	**954** 214000	1.45

Bearing Part No.			Design Type	Cage Type[1]	Seals Part No.		Mounting Dimensions				Weight
Double Cone	Single Cup	Double Cup			Main Seal Bore Seal	O-Ring	Max. Shaft Radius R	Cone Backing Diameter d_a	Max. Housing Radius r	Cup Backing Diameter D_b	
							mm in.	**mm** in.	**mm** in.	**mm** in.	**kg** lbs.
NP935171	NP276066	NP826915	SRNB-5	S	K168886 K168887D	K168883	**2.0** 0.08	**211.0** 8.31	**2.5** 0.10	**237.0** 9.33	**43.0** 96.0
NP460933	NP569052	NP194676	SRNB-1	S	K172726 K172725D	K143208	**1.5** 0.06	**220.0** 8.66	**3.3** 0.13	**269.0** 10.59	**33.0** 72.3
NP851756	NP977224	NP715336	SRNB-5[3]	S	K163013 K154654D	K163012	**1.0** 0.04	**234.0** 9.21	**2.5** 0.10	**277.0** 10.91	**57.0** 125
NP115001	NP350673	–	SRNB-5[3]	S	K163013 –	K163012	**1.0** 0.04	**233.0** 9.17	**2.5** 0.10	**277.0** 10.91	**54.0** 120
NP617527	NP858496 NP681156	–	SRNB-1	S	K172130 K154654D	K161576	**1.5** 0.06	**237.0** 9.33	**3.3** 0.13	**288.0** 11.34	**58.0** 128
NP823863	NP889258 NP371639	–	SRNB-1	S	K167010 K989560D	K161576	**1.5** 0.06	**242.0** 9.53	**3.3** 0.13	**297.0** 11.69	**40.0** 87.0
NP489116	NP396002	NP752460	SRNB-5[3]	S	K168183 K160513D	K166801	**2.0** 0.08	**253.0** 9.96	**3.0** 0.12	**303.0** 11.93	**62.0** 137
NP526790	NP696265	NP579685	SRNB-5[3]	S	K163450 K160513D	K163009	**1.5** 0.06	**258.0** 10.16	**4.0** 0.15	**314.0** 12.36	**93.0** 206
NP210270	NP905752 NP402263	–	SRNB-2	S	K161427W K154636-D	K161435	**1.5** 0.06	**259.0** 10.20	**3.3** 0.13	**328.0** 12.91	**70.0** 155
NP167500	NP625346 NP462195	–	SRNB-5[3]	S	K159547 K159546	K159548	**1.5** 0.06	**263.0** 10.35	**3.3** 0.13	**325.0** 12.80	**89.0** 196
NP167500	NP625346 NP462195	–	SRNB-5	S	K159547H K159546	K160681	**1.5** 0.06	**263.0** 10.35	**3.3** 0.13	**325.0** 12.80	**89.0** 196
NP390849	NP734279 NP454413	–	Spec.[2]	S	K167198 K154950D	K161380	**1.5** 0.06	**275.0** 10.83	**3.3** 0.13	**371.0** 14.61	**126** 278
NP831379	NP700160 NP922491	–	SRNB-1[3]	S	K168960 K156772D	K158925	**3.3** 0.13	**271.0** 10.67	**5.0** 0.20	**340.0** 13.39	**81.0** 178
NP588161	NP860998 NP434683	–	SRNB-5	S	K171942 K172086D	K147807	**2.5** 0.10	**278.0** 10.94	**4.0** 0.15	**339.0** 13.35	**97.0** 214

[1]Cage type: S – Stamped steel, P – Pin type.
[2]Designs are specially customized SRNB. Contact your Timken engineer for details.
[3]Two cup spacers without holes and lube slots.
NOTE: Assembly weight does not include seals, springs or auxiliary components.

Continued on next page.

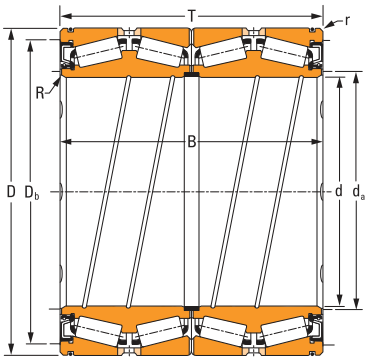

SRNB-1

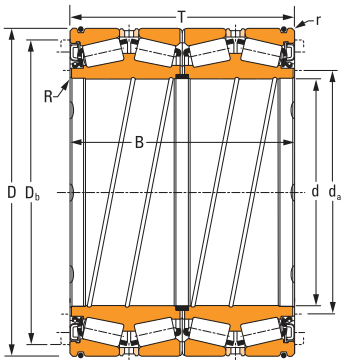

SRNB-2

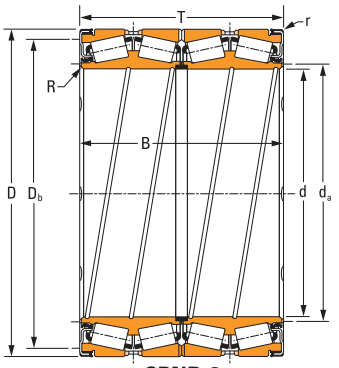

SRNB-3

TABLE 54. SRNB PRODUCT DATA *– continued*

Bearing Dimensions				Load Ratings							
				One Million Revolutions				90 Million Revolutions			
Bore d	O.D. D	Width Over Cups T	Width Over Cones B	Dynamic Radial $C_{1(4)}$	e	Y_1	Y_2	Dynamic Radial C_{90}	Dynamic Axial C_{a90}	Dynamic Radial $C_{90(4)}$	K Factor
mm in.	**mm** in.	**mm** in.	**mm** in.	**kN** lbf				**kN** lbf	**kN** lbf	**kN** lbf	
266.700 10.5000	**355.600** 14.0000	**228.600** 9.0000	**230.185** 9.0624	**2660** 598000	0.36	1.87	2.79	**198** 44500	**122** 27400	**688** 154800	1.62
269.875 10.6250	**381.000** 15.0000	**282.575** 11.1250	**282.575** 11.1250	**3860** 866000	0.33	2.03	3.03	**287** 64500	**163** 36700	**1000** 224000	1.76
273.050 10.7500	**380.898** 14.9960	**244.475** 9.6250	**244.475** 9.6250	**2920** 656000	0.33	2.03	3.03	**217** 48900	**124** 27800	**758** 170200	1.76
276.225 10.8750	**393.700** 15.5000	**269.875** 10.6250	**269.875** 10.6250	**3480** 784000	0.39	1.72	2.56	**260** 58400	**174** 39200	**904** 204000	1.49
279.400 11.0000	**393.700** 15.5000	**269.875** 10.6250	**269.875** 10.6250	**3340** 754000	0.41	1.66	2.48	**249** 56100	**173** 38900	**868** 195200	1.44
279.578 11.0070	**380.898** 14.9960	**244.475** 9.6250	**244.475** 9.6250	**2920** 656000	0.33	2.03	3.03	**217** 48900	**124** 27800	**758** 170200	1.76
279.975 11.0226	**379.948** 14.9586	**289.966** 11.4160	**290.017** 11.4180	**4620** 1038000	0.37	1.80	2.68	**344** 77300	**220** 49500	**1196** 270000	1.56
280 11.0236	**380** 14.9606	**340** 13.3858	**340** 13.3858	**3820** 858000	0.37	1.80	2.68	**284** 63800	**182** 40900	**988** 222000	1.56
280 11.0236	**395** 15.5512	**340** 13.3858	**340** 13.3858	**3920** 882000	0.40	1.67	2.49	**292** 65600	**201** 45100	**1016** 228000	1.45
285.750 11.2500	**380.898** 14.9960	**244.475** 9.6250	**244.475** 9.6250	**2920** 656000	0.33	2.03	3.03	**217** 48900	**124** 27800	**758** 170200	1.76
295 11.6142	**389.95** 15.3524	**216** 8.5039	**220** 8.6614	**2960** 666000	0.34	1.97	2.94	**220** 49600	**129** 29000	**768** 172600	1.71
304.648 11.9940	**438.048** 17.2460	**279.400** 11.0000	**280.990** 11.0626	**3840** 864000	0.42	1.61	2.41	**286** 64300	**204** 45800	**996** 224000	1.40
304.800 12.0000	**419.100** 16.5000	**269.875** 10.6250	**269.875** 10.6250	**3880** 872000	0.32	2.11	3.15	**289** 64900	**158** 35500	**1006** 226000	1.83
304.902 12.0040	**412.648** 16.2460	**266.700** 10.5000	**266.700** 10.5000	**3820** 858000	0.33	2.03	3.03	**284** 63900	**162** 36400	**990** 222000	1.76

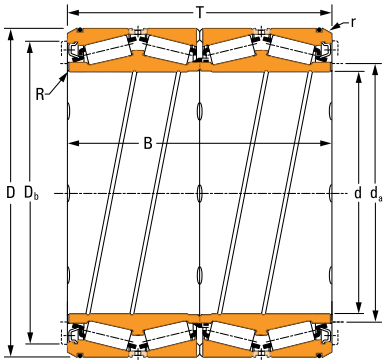

SRNB-4

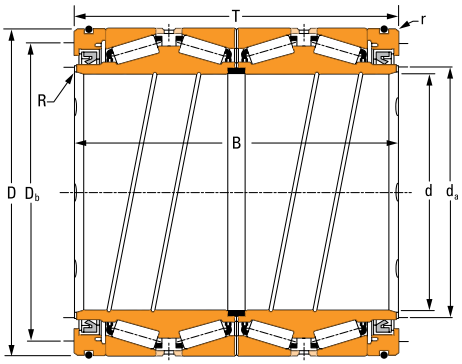

SRNB-5

Bearing Part No.			Design Type	Cage Type[1]	Seals Part No.		Mounting Dimensions				Weight
Double Cone	Single Cup	Double Cup			Main Seal Bore Seal	O-Ring	Max. Shaft Radius R	Cone Backing Diameter d_a	Max. Housing Radius r	Cup Backing Diameter D_b	
							mm in.	**mm** in.	**mm** in.	**mm** in.	**kg** lbs.
NP348929	NP193569 NP554698	–	SRNB-1	S	K167951 K154950D	K158925	**1.5** 0.06	**280.0** 11.02	**3.3** 0.13	**336.0** 13.23	**60.0** 132
NP954936	NP844081 M252514W	–	SRNB-1	S	K172114 K155042D	K160590	**3.3** 0.13	**291.3** 11.47	**3.3** 0.13	**354.0** 13.94	**100** 220
NP810309	NP982855 NP719384	–	SRNB-1	S	K167198 K156713D	K158926	**1.5** 0.06	**292.0** 11.50	**3.3** 0.13	**363.0** 14.29	**80.0** 177
NP814280	NP636997	NP203467	SRNB-1[3]	S	K168011 K156713D	K161380	**3.2** 0.13	**300.0** 11.81	**3.3** 0.13	**370.0** 14.57	**112** 238
NP962698	NP922382 NP822302	–	SRNB-1	S	K167198 K156713D	K161380	**3.2** 0.13	**300.0** 11.81	**3.3** 0.13	**371.0** 14.61	**97.0** 218
NP919993	NP982855 NP719384	–	SRNB-1	S	K167198 K156713D	K158926	**1.5** 0.06	**297.0** 11.69	**3.3** 0.13	**363.0** 14.29	**75.0** 166
NP229649	NP677008 NP834300	–	SRNB-4[3]	S	K160588W K160589W	K160590	**3.3** 0.13	**299.0** 11.77	**6.4** 0.25	**351.0** 13.82	**88.0** 193
NP385213	NP150229 NP183054	–	SRNB-5[3]	S	K168984 K166783D	K160590	**1.5** 0.06	**296.0** 11.65	**4.0** 0.15	**350.0** 13.78	**109** 241
NP116019	NP145534	NP178212	SRNB-5[3]	S	K166785 K166783-D	K160590	**1.5** 0.06	**299.0** 11.77	**4.0** 0.16	**367.0** 14.45	**128** 282
NP558574	NP982855 NP719384	–	SRNB-1	S	K167198 K154626D	K158926	**1.5** 0.06	**301.0** 11.85	**3.3** 0.13	**363.0** 14.29	**70.0** 154
NP163219	JLM355311W JLM355311X	–	SRNB-3	S	K156820-B K154610-D	–	**1.5** 0.06	**308.0** 12.13	**3.3** 0.13	**374.0** 14.72	**66.0** 146
NP464305	NP770366 NP525517	–	SRNB-2	S	K161678W K154642D	K161679	**3.3** 0.13	**327.0** 12.87	**4.8** 0.19	**409.0** 16.10	**135** 298
NP898539	NP423054 NP983557	–	SRNB-1	S	K168140 K154642D	K161828	**3.3** 0.13	**328.0** 12.91	**7.0** 0.28	**397.0** 15.63	**107** 237
NP435619	NP517253 NP152501	–	SRNB-2	S	K162548 K154642D	K161828	**3.3** 0.13	**322.0** 12.68	**1.5** 0.06	**395.0** 15.55	**98.0** 217

[1]Cage type: S – Stamped steel, P – Pin type.
[2]Two cup spacers without holes and lube slots.
NOTE: Assembly weight does not include seals, springs or auxiliary components.

Continued on next page.

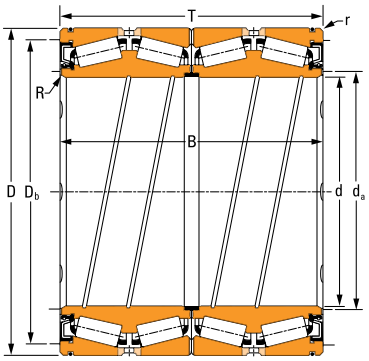

SRNB-1

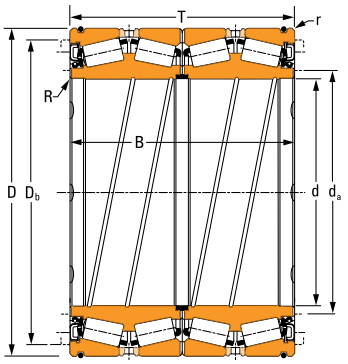

SRNB-2

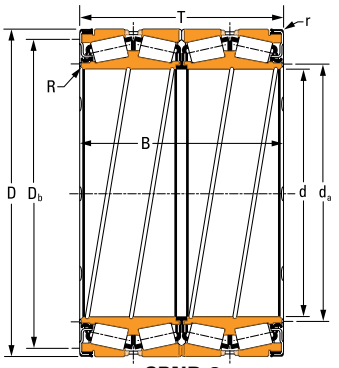

SRNB-3

TABLE 54. SRNB PRODUCT DATA *– continued*

Bearing Dimensions				Load Ratings							
				One Million Revolutions				90 Million Revolutions			
Bore d	O.D. D	Width Over Cups T	Width Over Cones B	Dynamic Radial $C_{1(4)}$	e	Y_1	Y_2	Dynamic Radial C_{90}	Dynamic Axial C_{a90}	Dynamic Radial $C_{90(4)}$	K Factor
mm in.	**mm** in.	**mm** in.	**mm** in.	**kN** lbf				**kN** lbf	**kN** lbf	**kN** lbf	
305.003 12.0080	**438.048** 17.2460	**279.400** 11.0000	**280.990** 11.0626	**3840** 864000	0.42	1.61	2.41	**286** 64300	**204** 45800	**996** 224000	1.40
310 12.2047	**430** 16.9291	**350** 13.7795	**350** 13.7795	**4680** 1052000	0.34	1.96	2.92	**348** 78300	**205** 46100	**1214** 272000	1.70
317.500 12.5000	**422.275** 16.6250	**269.875** 10.6250	**269.875** 10.6250	**3880** 872000	0.32	2.11	3.15	**289** 64900	**158** 35500	**1006** 226000	1.83
317.500 12.5000	**447.675** 17.6250	**327.026** 12.8750	**367.000** 14.4488	**5380** 1210000	0.34	2.01	2.99	**400** 90000	**230** 51600	**1394** 314000	1.74
330.302 13.0040	**438.023** 17.2450	**254.000** 10.0000	**247.650** 9.7500	**2560** 574000	0.46	1.46	2.18	**190** 42765	**150** 33673	**662** 149000	1.27
341.312 13.4375	**457.098** 17.9960	**254.000** 10.0000	**254.000** 10.0000	**3660** 822000	0.47	1.43	2.13	**272** 61200	**220** 49600	**948** 214000	1.24
343.052 13.5060	**457.098** 17.9960	**254.000** 10.0000	**254.000** 10.0000	**3660** 822000	0.47	1.43	2.13	**272** 61200	**220** 49600	**948** 214000	1.24
343.052 13.5060	**457.098** 17.9960	**254.000** 10.0000	**254.000** 10.0000	**3100** 696000	0.71	0.94	1.41	**230** 51800	**282** 63400	**802** 180200	0.82
355.600 14.0000	**457.200** 18.0000	**252.413** 9.9375	**252.413** 9.9375	**3220** 724000	0.39	1.71	2.54	**240** 53900	**162** 36300	**834** 187600	1.48
355.600 14.0000	**482.600** 19.0000	**269.876** 10.6250	**265.116** 10.4376	**4200** 944000	0.45	1.49	2.22	**312** 70200	**242** 54300	**1088** 244000	1.29
355.600 14.0000	**488.950** 19.2500	**265.110** 10.4374	**265.110** 10.4374	**4200** 944000	0.45	1.49	2.22	**312** 70200	**242** 54300	**1088** 244000	1.29
355.600 14.0000	**488.950** 19.2500	**317.500** 12.5000	**317.500** 12.5000	**5380** 1208000	0.33	2.03	3.03	**400** 89900	**228** 51200	**1394** 314000	1.76
384.175 15.1250	**546.100** 21.5000	**400.050** 15.7500	**400.050** 15.7500	**7800** 1752000	0.33	2.03	3.03	**580** 130000	**330** 74300	**2020** 454000	1.76
390 15.3543	**510** 20.0787	**350** 13.7795	**350** 13.7795	**5360** 1204000	0.42	1.61	2.41	**399** 89600	**285** 64200	**1388** 312000	1.40

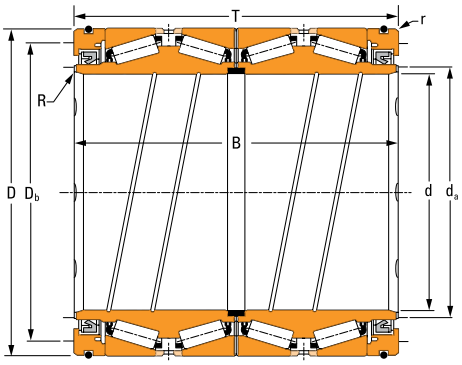

SRNB-5

Bearing Part No.			Design Type	Cage Type[1]	Seals Part No.		Mounting Dimensions				Weight
Double Cone	Single Cup	Double Cup			Main Seal Bore Seal	O-Ring	Max. Shaft Radius R	Cone Backing Diameter d_a	Max. Housing Radius r	Cup Backing Diameter D_b	
							mm in.	**mm** in.	**mm** in.	**mm** in.	**kg** lbs.
NP377177	NP770366 NP525517	–	SRNB-2	S	K161678W K154642D	K161679	**3.3** 0.13	**327.0** 12.87	**4.8** 0.19	**409.0** 16.10	**135** 297
NP305400	NP399131 NP797709	–	SRNB-1	S	K168140 169005D	K161828	**3.2** 0.13	**331.0** 13.03	**4.0** 0.16	**407.0** 16.02	**151** 334
NP683330	NP431159 NP495291	–	SRNB-1	S	K168140 K155117D	K161828	**3.3** 0.13	**332.0** 13.07	**3.3** 0.13	**403.0** 15.87	**99.0** 218
NP293697	HM259010	NP341864	SRNB-5	S	K171737 K155117D	K171739	**3.3** 0.13	**337.0** 13.27	**4.0** 0.16	**421.0** 16.57	**178** 392
NP326850	NP672263	NP418102	SRNB-1	S	K172943 K172942D	K161679	**1.5** 0.06	**347.0** 13.66	**3.3** 0.13	**415.0** 16.34	**97.0** 213
NP416510	NP572730 NP716053	–	SRNB-1	S	K166774 K150490D	K160139	**1.5** 0.06	**365.0** 14.37	**3.3** 0.13	**432.0** 17.01	**111** 245
NP996241	NP572730 NP716053	–	SRNB-1	S	K166774 K150490D	K160139	**1.5** 0.06	**365.0** 14.37	**3.3** 0.13	**432.0** 17.01	**108** 237
NP719584	NP900043 NP507595	–	SRNB-1	S	K166774 K150490D	K160139	**1.5** 0.06	**365.0** 14.37	**3.3** 0.13	**434.0** 17.09	**110** 243
NP974481	NP367732 NP302939	–	SRNB-3[3]	S	K158410 K154614-D	–	**1.5** 0.06	**366.0** 14.41	**2.0** 0.08	**432.0** 17.01	**96.0** 211
NP535762	NP891852 NP749583	–	SRNB-1[3]	S	K172853 K154614D	K161253	**1.5** 0.06	**374.0** 14.72	**3.3** 0.13	**454.0** 17.87	**135** 296
NP096778	NP002880 NP554240	–	SRNB-2	S	K161252G K154614-D	K161253	**1.5** 0.06	**374.0** 14.72	**3.3** 0.13	**462.0** 18.19	**143** 316
NP587863	NP188304 NP897726	–	Spec.[2]	S	K161586W –	K161253	**1.5** 0.06	**374.0** 14.72	**3.3** 0.13	**468.0** 18.43	**171** 378
NP375407	NP311778 NP195533	–	SRNB-1	S	K172419 K161475D	K161476	**3.0** 0.12	**410.0** 16.14	**6.4** 0.25	**513.0** 20.20	**283** 622
NP338451	NP867621 NP527928		SRNB-5	S	K167837 K172672D	K172669	**2.0** 0.08	**410.0** 16.14	**4.5** 0.18	**479.0** 18.86	**184** 405

[1]Cage type: S – Stamped steel, P – Pin type.
[2]Designs are specially customized SRNB. Contact your Timken engineer for details.
[3]Two cup spacers without holes and lube slots.
NOTE: Assembly weight does not include seals, springs or auxiliary components.

Continued on next page.

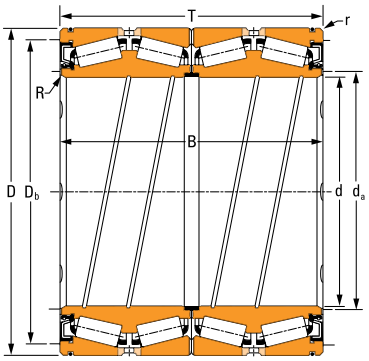

SRNB-1

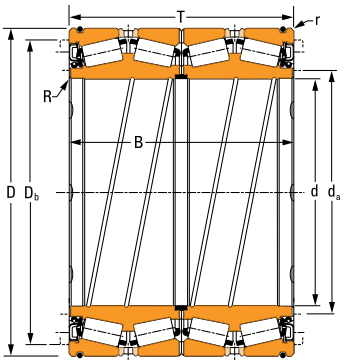

SRNB-2

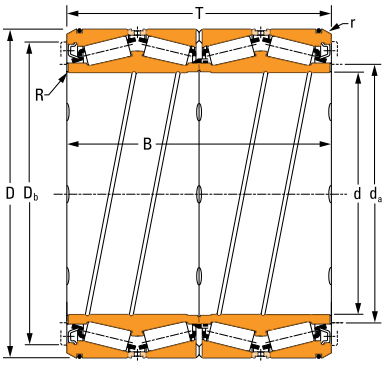

SRNB-4

TABLE 54. SRNB PRODUCT DATA *– continued*

Bearing Dimensions				Load Ratings							
				One Million Revolutions				90 Million Revolutions			
Bore d	O.D. D	Width Over Cups T	Width Over Cones B	Dynamic Radial $C_{1(4)}$	e	Y_1	Y_2	Dynamic Radial C_{90}	Dynamic Axial C_{a90}	Dynamic Radial $C_{90(4)}$	K Factor
mm in.	**mm** in.	**mm** in.	**mm** in.	**kN** lbf				**kN** lbf	**kN** lbf	**kN** lbf	
406.400 16.0000	**546.100** 21.5000	**288.924** 11.3750	**288.924** 11.3750	**5140** 1154000	0.43	1.58	2.35	**382** 86000	**279** 62600	**1332** 300000	1.37
406.400 16.0000	**546.100** 21.5000	**330.000** 12.9921	**330.000** 12.9921	**5240** 1178000	0.47	1.42	2.11	**390** 87600	**316** 71100	**1358** 306000	1.23
406.400 16.0000	**562.000** 22.1260	**381.000** 15.0000	**381.000** 15.0000	**7400** 1666000	0.33	2.03	3.03	**552** 124000	**314** 70600	**1922** 432000	1.76
409.575 16.1250	**546.100** 21.5000	**334.975** 13.1880	**334.975** 13.1880	**4500** 1012000	0.61	1.11	1.65	**335** 75300	**347** 78100	**1166** 262000	0.96
415.925 16.3750	**590.550** 23.2500	**435.000** 17.1260	**435.000** 17.1260	**7560** 1698000	0.58	1.15	1.72	**562** 126000	**563** 126000	**1958** 440000	1.00
430.000 16.9291	**575.000** 22.6378	**380.000** 14.9606	**380.000** 14.9606	**6340** 1428000	0.44	1.53	2.29	**473** 106000	**355** 79700	**1646** 370000	1.33
431.800 17.0000	**571.500** 22.5000	**336.550** 13.2500	**336.550** 13.2500	**6140** 1380000	0.44	1.53	2.29	**457** 103000	**344** 77300	**1592** 358000	1.33
440 17.3228	**590** 23.2283	**481.5** 18.9567	**481.5** 18.9567	**8960** 2020000	0.34	2.00	2.97	**667** 150000	**385** 86500	**2320** 522000	1.73
449.948 17.7145	**594.949** 23.4232	**368.000** 14.4882	**368.000** 14.4882	**7400** 1664000	0.30	2.26	3.37	**551** 124000	**282** 63300	**1920** 432000	1.96
457.200 18.0000	**596.900** 23.5000	**279.400** 11.0000	**276.225** 10.8750	**4920** 1108000	0.41	1.66	2.48	**367** 82400	**254** 57100	**1278** 288000	1.44
457.200 18.0000	**606.000** 23.8583	**381.000** 15.0000	**381.000** 15.0000	**7500** 1688000	0.30	2.22	3.30	**559** 126000	**291** 65400	**1946** 438000	1.92
459.949 18.1082	**624.924** 24.6033	**421.000** 16.5748	**421.000** 16.5748	**8740** 1962000	0.33	2.03	3.03	**650** 146000	**370** 83200	**2260** 508000	1.76
482.600 19.0000	**615.950** 24.2500	**330.200** 13.0000	**330.200** 13.0000	**6480** 1458000	0.33	2.03	3.03	**483** 109000	**275** 61800	**1682** 378000	1.76
482.600 19.0000	**615.950** 24.2500	**379.984** 14.9600	**379.984** 14.9600	**5400** 1214000	0.33	2.03	3.03	**402** 90300	**229** 51400	**1400** 314000	1.76

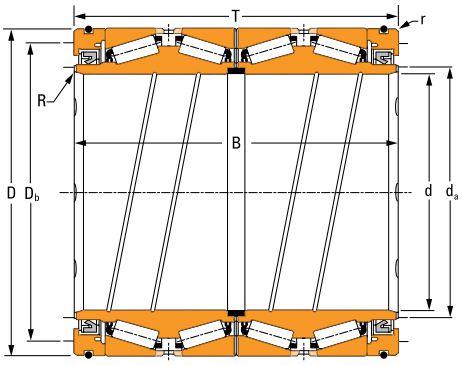

SRNB-5

Bearing Part No.			Design Type	Cage Type[1]	Seals Part No.		Mounting Dimensions				Weight
Double Cone	Single Cup	Double Cup			Main Seal Bore Seal	O-Ring	Max. Shaft Radius R	Cone Backing Diameter d_a	Max. Housing Radius r	Cup Backing Diameter D_b	
							mm in.	**mm** in.	**mm** in.	**mm** in.	**kg** lbs.
NP041977	NP764990 NP665211	–	SRNB-2	S	K161769W K151558-D	K161476	**1.5** 0.06	**425.0** 16.73	**6.4** 0.25	**516.0** 20.31	**182** 402
NP706368	NP690776 NP142142	–	SRNB-2	S	K161769W K151558-D	K161476	**1.5** 0.06	**435.0** 17.13	**6.4** 0.25	**516.0** 20.31	**208** 459
NP553477	NP251593 NP598814	–	SRNB-1	S	K168907 K151558D	K160971	**3.3** 0.13	**413.0** 16.26	**6.4** 0.25	**534.0** 21.02	**265** 585
NP561275	NP749991 NP851566	–	SRNB-5	S	K162042 K157241-D	K161476	**3.3** 0.13	**428.0** 16.85	**7.8** 0.31	**510.0** 20.08	**203** 448
NP895224	NP245765 NP674510	–	SRNB-1	S	K172121 K162927D	K160770	**3.3** 0.13	**444.0** 17.48	**6.4** 0.25	**540.0** 21.26	**392** 863
NP800471	NP464316 NP023656	–	SRNB-2	S	K162880 K154634D	K160971	**1.5** 0.06	**452.0** 17.80	**6.4** 0.25	**537.0** 21.14	**274** 604
NP186641	NP712790 NP371617	–	SRNB-2[3]	S	K162880 K154634D	K160971	**2.0** 0.08	**453.0** 17.83	**3.3** 0.13	**537.0** 21.14	**231** 509
NP981440	NP672703	NP649333	SRNB-4[3]	S	K161953W K161954W	K160770	**3.5** 0.14	**463.0** 18.23	**7.5** 0.30	**552.0** 21.73	**365** 805
NP189922	NP714743 LM170414W	–	SRNB-1	S	K168035 K154629D	K160770	**3.0** 0.12	**481.0** 18.94	**6.0** 0.24	**567.0** 22.32	**268** 592
NP428889	NP645122 NP491642	–	SRNB-1	S	K172122 K161432D	K160770	**3.0** 0.12	**480.0** 18.90	**3.5** 0.14	**570.0** 22.44	**199** 440
NP062614	NP575276 NP779521	–	SRNB-2	S	K163369NS K161432D	K160770	**3.0** 0.12	**482.0** 18.98	**6.0** 0.24	**576.0** 22.68	**289** 638
NP105083	NP142188 NP542454	–	SRNB-1	S	K168078 K161432D	K153379	**3.0** 0.12	**486.0** 19.13	**9.0** 0.35	**588.0** 23.15	**361** 797
NP471919	NP649954 NP944636	–	SRNB-1	S	K167867 K150475D	K153379	**6.4** 0.25	**507.0** 19.96	**6.5** 0.25	**585.0** 23.03	**232** 511
NP998820	NP353430	–	Spec.[2]	S	K161682 –	K153379	**3.3** 0.13	**507.0** 19.96	**6.0** 0.24	**585.0** 23.03	**258** 568

[1]Cage type: S – Stamped steel, P – Pin type.
[2]Designs are specially customized SRNB. Contact your Timken engineer for details.
[3]Two cup spacers without holes and lube slots.
NOTE: Assembly weight does not include seals, springs or auxiliary components.

Continued on next page.

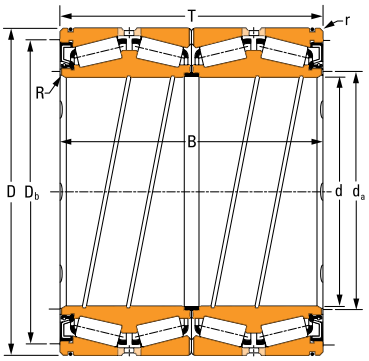

SRNB-1

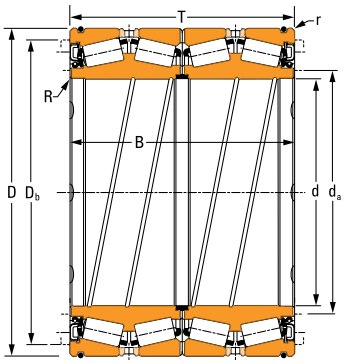

SRNB-2

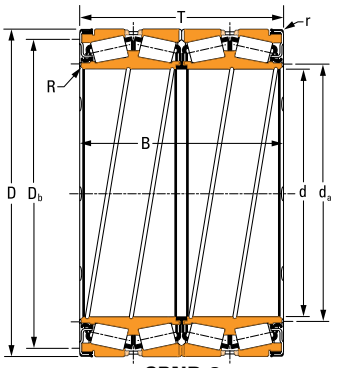

SRNB-3

TABLE 54. SRNB PRODUCT DATA *– continued*

Bearing Dimensions				Load Ratings							
				One Million Revolutions				90 Million Revolutions			
Bore d	O.D. D	Width Over Cups T	Width Over Cones B	Dynamic Radial $C_{1(4)}$	e	Y_1	Y_2	Dynamic Radial C_{90}	Dynamic Axial C_{a90}	Dynamic Radial $C_{90(4)}$	K Factor
mm in.	**mm** in.	**mm** in.	**mm** in.	**kN** lbf				**kN** lbf	**kN** lbf	**kN** lbf	
482.600 19.0000	**615.950** 24.2500	**377.825** 14.8750	**406.400** 16.0000	**6760** 1520000	0.33	2.03	3.03	**503** 113000	**286** 64400	**1752** 394000	1.76
482.600 19.0000	**615.950** 24.2500	**400.050** 15.7500	**400.050** 15.7500	**7080** 1592000	0.33	2.03	3.03	**527** 118000	**300** 67400	**1834** 412000	1.76
482.600 19.0000	**615.950** 24.2500	**400.050** 15.7500	**419.100** 16.5000	**6480** 1458000	0.33	2.03	3.03	**483** 109000	**275** 61800	**1682** 378000	1.76
482.600 19.0000	**615.950** 24.2500	**500.000** 19.6850	**500.000** 19.6850	**6480** 1458000	0.33	2.03	3.03	**483** 109000	**275** 61800	**1682** 378000	1.76
482.600 19.0000	**615.950** 24.2500	**379.984** 14.9600	**379.984** 14.9600	**5400** 1214000	0.33	2.03	3.03	**402** 90300	**229** 51400	**1400** 314000	1.76
489.026 19.2530	**634.873** 24.9950	**315.696** 12.4290	**320.675** 12.6250	**6520** 1468000	0.34	1.97	2.94	**486** 109000	**283** 63700	**1692** 380000	1.71
490 19.2913	**625** 24.6063	**385** 15.1575	**385** 15.1575	**6820** 1532000	0.33	2.04	3.04	**507** 114000	**287** 64500	**1766** 398000	1.77
510 20.0787	**655** 25.7874	**379** 14.9213	**377** 14.8426	**8120** 1824000	0.33	2.07	3.08	**604** 136000	**337** 75700	**2100** 472000	1.79
510 20.0787	**655** 25.7874	**410** 16.1417	**408** 16.0630	**9980** 2240000	0.33	2.07	3.08	**743** 167000	**415** 93200	**2580** 582000	1.79
514.350 20.2500	**673.100** 26.5000	**422.275** 16.6250	**422.275** 16.6250	**8080** 1816000	0.33	2.03	3.03	**602** 135000	**342** 77000	**2100** 470000	1.76
558.800 22.0000	**736.600** 29.0000	**457.200** 18.0000	**455.612** 17.9374	**9960** 2240000	0.35	1.95	2.91	**741** 167000	**439** 98800	**2580** 580000	1.69
585.788 23.0625	**771.525** 30.3750	**479.425** 18.8750	**479.425** 18.8750	**11800** 2660000	0.38	1.78	2.65	**878** 197000	**571** 128000	**3060** 688000	1.54
585.788 23.0625	**771.525** 30.3750	**567.000** 22.3228	**567.000** 22.3228	**13140** 2960000	0.33	2.03	3.03	**979** 220000	**557** 125000	**3400** 766000	1.76
609.600 24.0000	**787.400** 31.0000	**361.950** 14.2500	**361.950** 14.2500	**8160** 1834000	0.37	1.82	2.72	**608** 137000	**386** 86700	**2120** 476000	1.58

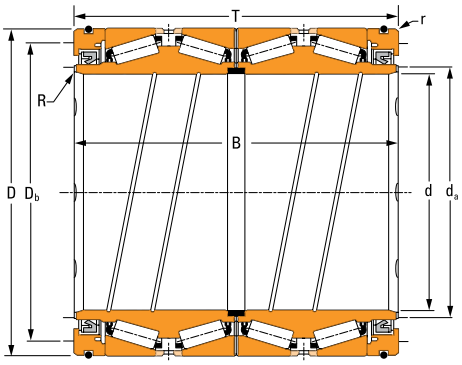

SRNB-5

Bearing Part No.			Design Type	Cage Type[1]	Seals Part No.		Mounting Dimensions				Weight
Double Cone	Single Cup	Double Cup			Main Seal Bore Seal	O-Ring	Max. Shaft Radius R	Cone Backing Diameter d_a	Max. Housing Radius r	Cup Backing Diameter D_b	
							mm in.	**mm** in.	**mm** in.	**mm** in.	**kg** lbs.
NP453574	NP672404 NP020698	–	Spec.[2]	S	K167867 K150475D	K153379	**4.0** 0.16	**507.0** 19.96	**6.4** 0.25	**582.0** 22.91	**267** 588
NP216529	NP703196	–	Spec.[2]	P	K160722 –	K153379	**6.4** 0.25	**504.0** 19.84	**6.4** 0.25	**582.0** 22.91	**280** 616
NP630107	NP226360 NP944636	–	SRNB-5	S	K160722 K150475D	K153379	**4.0** 0.16	**507.0** 19.96	**6.8** 0.28	**585.0** 23.03	**279** 614
NP644633	NP649954 NP230083	–	Spec.[2]	S	K167867 K150475D	K153379	**6.4** 0.25	**507.0** 19.96	**6.5** 0.25	**585.0** 23.03	**341** 752
NP313976	NP353430	–	Spec.[2]	S	K161682 –	K153379	**3.3** 0.13	**507.0** 19.96	**7.5** 0.30	**585.0** 23.03	**258** 568
NP780879	LM372814X LM372814W	–	SRNB-3	S	K157000-B K156999-D	–	**3.3** 0.13	**513.0** 20.20	**2.0** 0.08	**597.0** 23.50	**244** 538
NP109340	NP964377 NP074589	–	SRNB-2	S	K167402 K167390-D	K153379	**3.0** 0.12	**513.0** 20.20	**3.0** 0.12	**591.0** 23.27	**283** 624
NP409679	NP713431 NP575237	–	SRNB-1	S	K168025 K160942D	K166962	**1.5** 0.06	**531.0** 20.91	**6.4** 0.25	**624.0** 24.57	**313** 691
DX283454	DX069432 DX013515	–	SRNB-2	S	K166963 K160942D	K166962	**1.5** 0.06	**531.0** 20.91	**6.4** 0.25	**624.0** 24.57	**328** 724
NP252590	NP193000	NP855595	SRNB-1	S	K172632 K172631D	K172629	**3.3** 0.13	**543.0** 21.38	**6.4** 0.25	**645.0** 25.39	**387** 852
NP877970	NP067586 NP954245	–	SRNB-2	S	K163909 K163907-D	K163911	**4.0** 0.16	**588.0** 23.15	**6.4** 0.25	**693.0** 27.28	**509** 1123
NP321803	NP312801 NP863730	–	SRNB-2	S	K162772 K160571-D	K160569	**4.8** 0.19	**618.0** 24.33	**6.4** 0.25	**732.0** 28.82	**587** 1295
NP264014	NP456220 NP460073	–	SRNB-5	P	K160570 K160571-D	K160569	**3.3** 0.13	**615.0** 24.21	**6.4** 0.25	**726.0** 28.58	**695** 1565
NP324718	L480210W L480210X	–	SRNB-3	p	K154138-B K154136-D	–	**6.4** 0.25	**642.0** 25.28	**6.4** 0.25	**750.0** 29.53	**440** 969

[1]Cage type: S – Stamped steel, P – Pin type.
[2]Designs are specially customized SRNB. Contact your Timken engineer for details.
NOTE: Assembly weight does not include seals, springs or auxiliary components.

Continued on next page.

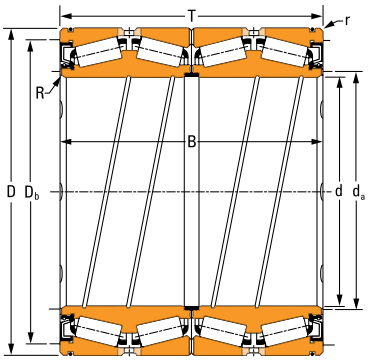

SRNB-1

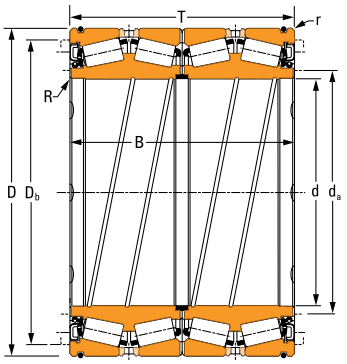

SRNB-2

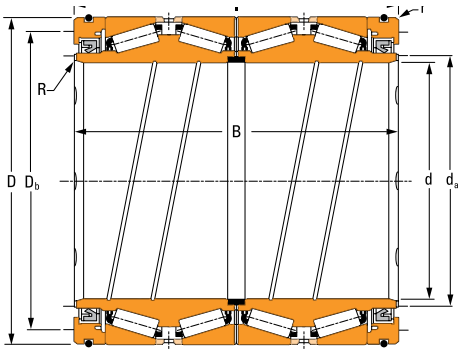

SRNB-5

TABLE 54. SRNB PRODUCT DATA *– continued*

Bearing Dimensions				Load Ratings							
				One Million Revolutions				90 Million Revolutions			
Bore d	O.D. D	Width Over Cups T	Width Over Cones B	Dynamic Radial $C_{1(4)}$	e	Y_1	Y_2	Dynamic Radial C_{90}	Dynamic Axial C_{a90}	Dynamic Radial $C_{90(4)}$	K Factor
mm in.	**mm** in.	**mm** in.	**mm** in.	**kN** lbf				**kN** lbf	**kN** lbf	**kN** lbf	
685.500 26.9882	**862.000** 33.9370	**375.000** 14.7638	**375.000** 14.7638	**9600** 2160000	0.33	2.03	3.03	**715** 161000	**407** 91500	**2500** 560000	1.76
685.800 27.0000	**876.300** 34.5000	**355.600** 14.0000	**352.425** 14.0000	**9600** 2160000	0.33	2.03	3.03	**715** 161000	**407** 91500	**2500** 560000	1.76
685.800 27.0000	**876.300** 34.5000	**428.625** 16.8750	**428.625** 16.8750	**9600** 2160000	0.33	2.03	3.03	**715** 161000	**407** 91500	**2500** 560000	1.76
708.025 27.8750	**930.275** 36.6250	**565.150** 22.2500	**565.150** 22.5000	**15320** 3440000	0.34	1.98	2.96	**1140** 256000	**663** 149000	**3980** 894000	1.72
710 27.9528	**900** 35.4331	**410** 16.1417	**410** 16.1417	**9940** 2240000	0.53	1.28	1.91	**740** 166000	**665** 149000	**2580** 580000	1.11
711.200 28.0000	**914.400** 36.0000	**390.000** 15.3543	**390.000** 15.3543	**7800** 1754000	0.43	1.57	2.34	**581** 131000	**428** 96200	**2020** 454000	1.36
711.200 28.0000	**914.400** 36.0000	**420.000** 16.5354	**420.000** 16.5354	**7800** 1754000	0.43	1.57	2.34	**581** 131000	**428** 96200	**2020** 454000	1.36
717.550 28.2500	**946.150** 37.2500	**660.000** 25.9843	**660.000** 25.9843	**18620** 4180000	0.33	2.03	3.03	**1390** 312000	**790** 178000	**4820** 1086000	1.76

Bearing Part No.			Design Type	Cage Type[1]	Seals Part No.		Mounting Dimensions				Weight
Double Cone	Single Cup	Double Cup			Main Seal Bore Seal	O-Ring	Max. Shaft Radius R	Cone Backing Diameter d_a	Max. Housing Radius r	Cup Backing Diameter D_b	
							mm in.	**mm** in.	**mm** in.	**mm** in.	**kg** lbs.
NP891876	NP250630 NP210109	–	SRNB-5	S	K159541 K156715-D	K159542	**3.3** 0.13	**714.0** 28.11	**6.4** 0.25	**837.0** 32.95	**474** 1042
NP145790	NP026760 NP809347	–	SRNB-2	S	K161690W K156715-D	K159542	**3.3** 0.13	**714.0** 28.11	**6.4** 0.25	**843.0** 33.19	**503** 1108
NP026261	NP524969 NP823567	–	Spec.[2]	S	K161690W K156715-D	K159542	**3.3** 0.13	**714.0** 28.11	**6.4** 0.25	**843.0** 33.19	**577** 1272
NP388194	NP269019	NP928996	SRNB-5[3]	P	K161325W K161326D	K160938	**4.0** 0.16	**744.0** 29.29	**6.4** 0.25	**882.0** 34.72	**1015** 2237
NP019603	NP877539 NP559929	–	SRNB-1	S	K168965 K160937D	K160938	**3.5** 0.14	**741.0** 29.17	**6.4** 0.25	**852.0** 33.54	**592** 1306
NP778193	NP926680 NP928602	–	SRNB-5	P	K168128 K161326D	K160938	**3.5** 0.14	**744.0** 29.29	**5.0** 0.20	**870.0** 34.25	**621** 1368
NP746115	NP926680	NP354335	SRNB-5	P	K168128 K161326D	K160938	**3.5** 0.14	**744.0** 29.29	**5.0** 0.20	**870.0** 34.25	**653** 1440
NP839885	NP447874 NP455824	–	SRNB-5	P	K160566 K160567	K160565	**3.3** 0.13	**753.0** 29.65	**6.4** 0.25	**894.0** 35.20	**1309** 2885

[1]Cage type: S – Stamped steel, P – Pin type.
[2]Designs are specially customized SRNB. Contact your Timken engineer for details.
[3]Two cup spacers without holes and lube slots.
NOTE: Assembly weight does not include seals, springs or auxiliary components.

TQITS BEARINGS

Developed for high-speed rolling mill roll-neck applications, these four-row tapered roller bearings are supplied with a tapered-bore bearing to minimize neck wear.

Fig. 47. TQITS bearing.

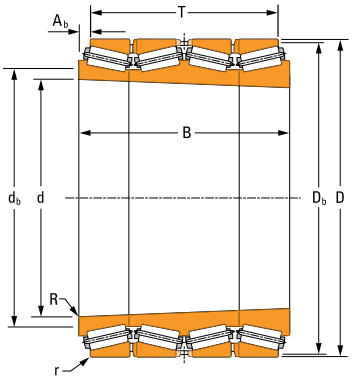

Fig. 48. TQITS bearing.

OVERALL DIMENSIONS:

d – Bore diameter

D – Outer diameter

T – Width over cups

B – Width over cones

R – Max. shaft radius

d_b – Cone backing diameter

r – Max. housing radius

D_b – Cup backing diameter

A_b – Axial cage clearance

FOUR-ROW TAPERED ROLLER BEARING DESIGN TYPES TQITS (TIGHT FIT MOUNTING)

TQIT

- Two single inner rings.
- One double inner ring.
- Two double outer rings.
- One outer-ring spacer.
- Tapered bore.

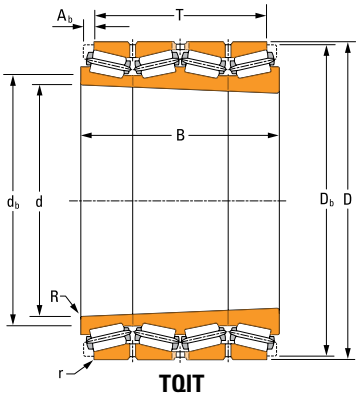

TQIT

TQITE

- Two single inner rings, one with extended rib.
- One double inner ring.
- Two double outer rings.
- One outer-ring spacer.
- Tapered bore.

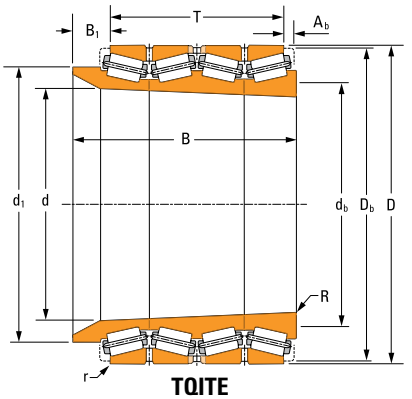

TQITE

TQITS

- Two single inner rings.
- One double inner ring.
- Four single outer rings.
- Three outer-ring spacers.
- Tapered bore.

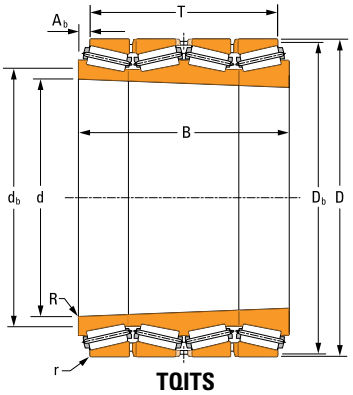

TQITS

TQITSE

- Two single inner rings, one with extended rib.
- One double inner ring.
- Four single outer rings.
- Three outer-ring spacers.
- Tapered bore.

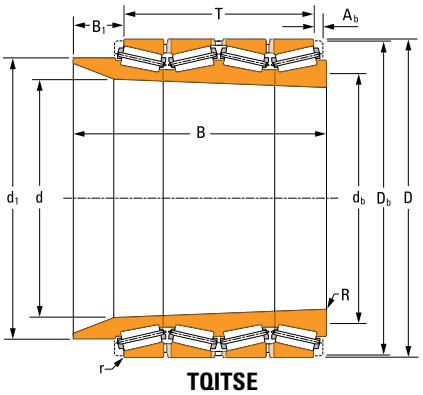

TQITSE

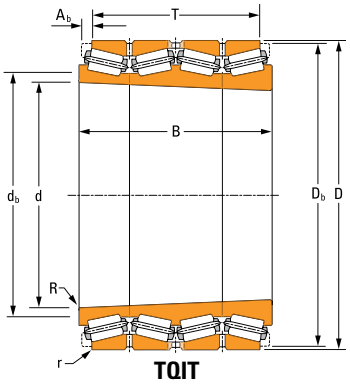

TQIT

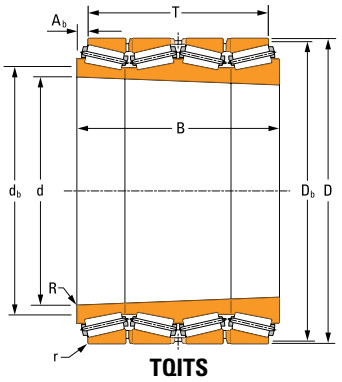

TQITS

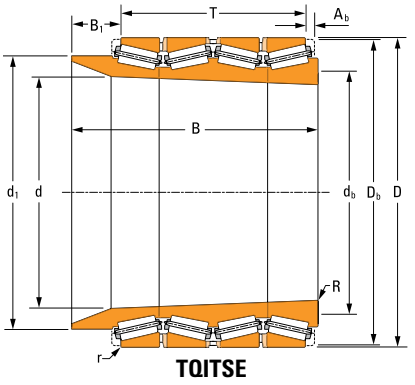

TQITSE

TABLE 55. TQITS PRODUCT DATA

Bearing Dimensions						Load Ratings							
						One Million Revolutions				90 Million Revolutions			
Bore[1] d	O.D. D	Width over Cups T	Width over Cones B	B_1	d_1	Dynamic Radial $C_{1(4)}$	e	Y_1	Y_2	Dynamic Radial C_{90}	Dynamic Axial C_{a90}	Dynamic Radial $C_{90(4)}$	K Factor
mm in.	**mm** in.	**mm** in.	**mm** in.	**mm** in.	**mm** in.	**kN** lbf				**kN** lbf	**kN** lbf	**kN** lbf	
165.456 6.5140	**229.946** 9.0530	**142.875** 5.6250	**165.100** 6.5000	–	–	**1094** 246000	0.40	1.67	2.49	**81.4** 18300	**56.0** 12600	**284** 63800	1.45
175.781 6.9205	**260.502** 10.2560	**142.901** 5.6260	**171.451** 6.7500	–	–	**1318** 296000	0.40	1.67	2.49	**98.2** 22100	**67.5** 15200	**342** 76800	1.45
193.807 7.6302	**269.875** 10.6250	**214.310** 8.4374	**279.397** 10.9999	**52.388** 2.0625	**234.950** 9.2500	**1802** 406000	0.33	2.03	3.03	**134** 30200	**76.4** 17200	**468** 105000	1.76
190.500 7.5000	**260.350** 10.2500	**169.073** 6.6564	**192.883** 7.5938	–	–	**1290** 290000	0.40	1.70	2.53	**96.0** 21600	**65.2** 14700	**334** 75200	1.47
195.300 7.6890	**259.969** 10.2350	**144.465** 5.6876	**161.925** 6.3750	–	–	**1114** 250000	0.33	2.03	3.03	**83.0** 18700	**47.3** 10600	**290** 65000	1.76
200.820 7.9060	**284.162** 11.1875	**219.075** 8.6250	**239.715** 9.4375	–	–	**1854** 416000	0.33	2.03	3.03	**138** 31000	**78.6** 17700	**480** 108000	1.76
207.167 8.1562	**292.100** 11.5000	**222.250** 8.7500	**286.545** 11.2813	**52.388** 2.0625	**254.000** 10.0000	**2080** 470000	0.33	2.03	3.03	**156** 35000	**88.5** 19900	**542** 121800	1.76
207.962 8.1875	**279.400** 11.0000	**168.275** 6.6250	**190.500** 7.5000	–	–	**1342** 302000	0.46	1.45	2.17	**100** 22400	**79.2** 17800	**348** 78200	1.26
219.075 8.6250	**288.925** 11.3750	**168.275** 6.6250	**190.500** 7.5000	–	–	**1414** 318000	0.48	1.39	2.08	**105** 23700	**86.7** 19500	**366** 82400	1.21
225.425 8.8750	**314.325** 12.3750	**230.188** 9.0625	**255.588** 10.0625	–	–	**2420** 544000	0.33	2.03	3.03	**180** 40500	**103** 23100	**628** 141000	1.76
228.600 9.0000	**311.150** 12.2500	**190.500** 7.5000	**212.725** 8.3750	–	–	**1876** 422000	0.33	2.03	3.03	**140** 31400	**79.5** 17900	**486** 109400	1.76
247.650 9.7500	**327.025** 12.8750	**187.325** 7.3750	**209.550** 8.2500	–	–	**1974** 444000	0.32	2.10	3.13	**147** 33000	**80.8** 18200	**512** 115000	1.82
258.762 10.1874	**358.775** 14.1250	**257.175** 10.1250	**292.100** 11.5000	–	–	**3180** 716000	0.33	2.03	3.03	**237** 53300	**135** 30300	**826** 185600	1.76
271.462 10.6875	**381** 15.0000	**269.875** 10.6250	**301.625** 11.8750	–	–	**4180** 938000	0.33	2.03	3.03	**311** 69900	**177** 39800	**1082** 244000	1.76
287.500 11.3180	**439.948** 17.3208	**284.000** 11.1811	**330.000** 12.9921	–	–	**4520** 1014000	0.47	1.43	2.13	**336** 75500	**272** 61200	**1170** 262000	1.24

[1]The bore diameter (d) corresponds to the large bore.

Bearing Part No.			Design Type	Cage Type[2]	Mounting Dimensions					Weight
Single Cone (Smallest)	Single Cup	Double Cup			Max. Shaft Radius R	Cone Backing Diameter d_b	Max. Housing Radius r	Cup Backing Diameter D_b	Axial Cage Clearance A_b	
					mm in.	**mm** in.	**mm** in.	**mm** in.	**mm** in.	**kg** lbs.
LM533730T	–	LM533710D	TQIT	S	**3.3** 0.13	**172.0** 6.77	**0.8** 0.03	**223.0** 8.78	**11.3** 0.44	**21.0** 46.0
LM535630T	–	LM535610D	TQIT	S	**3.3** 0.13	**183.0** 7.20	**0.8** 0.03	**246.9** 9.72	**11.1** 0.44	**29.0** 65.0
M238832T	M238810	–	TQITSE	S	**3.3** 0.13	**196.0** 7.72	**1.5** 0.06	**256.0** 10.08	**3.4** 0.13	**49.0** 109
LM538630T	–	LM538614D	TQIT	S	**3.3** 0.13	**197.0** 7.76	**0.8** 0.03	**251.0** 9.88	**9.9** 0.39	**33.0** 72.0
LM239530T	–	LM239512D	TQIT	S	**3.3** 0.13	**202.0** 7.95	**0.8** 0.03	**252.0** 9.92	**9.4** 0.37	**23.0** 52.0
M240631T	–	M240611D	TQIT	S	**3.3** 0.13	**207.0** 8.15	**1.5** 0.06	**272.0** 10.71	**10.7** 0.42	**51.0** 113
M241530T	M241510	–	TQITSE	S	**3.0** 0.12	**212.0** 8.35	**1.5** 0.06	**279.0** 10.98	**3.4** 0.14	**63.0** 140
LM741330T	–	LM741314D	TQIT	S	**3.3** 0.13	**215.0** 8.46	**0.8** 0.03	**271.0** 10.67	**10.4** 0.41	**35.0** 78.0
LM742730T	–	LM742714D	TQIT	S	**3.3** 0.13	**226.0** 8.90	**0.8** 0.03	**280.0** 11.02	**8.9** 0.35	**36.0** 80.0
M244230T	–	M244210CD	TQIT	S	**3.3** 0.13	**231.0** 9.09	**1.5** 0.06	**300.0** 11.81	**3.5** 0.14	**65.0** 144
LM245130T	–	LM245110D	TQIT	S	**3.3** 0.13	**235.0** 9.25	**1.5** 0.06	**300.0** 11.81	**10.9** 0.43	**50.0** 111
LM247730T	–	LM247710D	TQIT	S	**3.3** 0.13	**253.0** 9.96	**1.6** 0.06	**316.0** 12.44	**10.0** 0.39	**50.0** 109
M249730T	–	M249710CD	TQIT	S	**3.3** 0.13	**264.0** 10.39	**1.5** 0.06	**343.0** 13.50	**12.6** 0.50	**95.0** 209
M252330T	–	M252310CD	TQIT	p	**6.4** 0.25	**284.0** 11.18	**1.5** 0.06	**364.0** 14.32	**3.5** 0.14	**115** 254
NP385038	NP385825	–	TQITS	S	**5.0** 0.20	**303.0** 11.93	**6.4** 0.25	**414.0** 16.30	**3.5** 0.14	**184** 405

[2]Cage type: S – Stamped steel, P – Pin type.

Continued on next page.

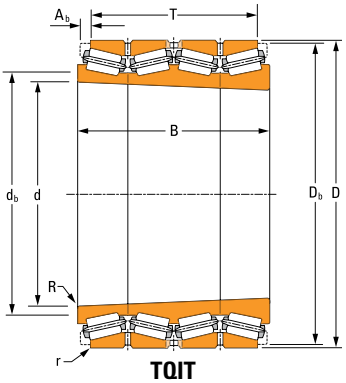

TQIT

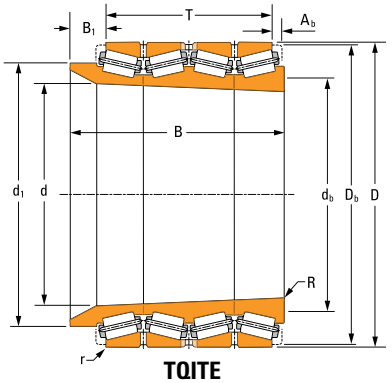

TQITE

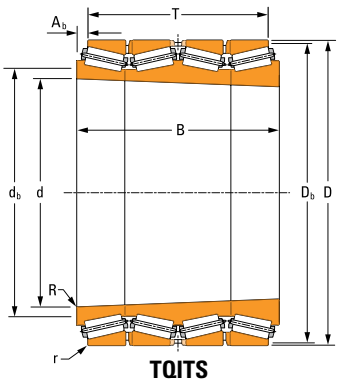

TQITS

TABLE 55. TQITS PRODUCT DATA *– continued*

Bearing Dimensions						Load Ratings							
						One Million Revolutions				90 Million Revolutions			
Bore[1] d	O.D. D	Width over Cups T	Width over Cones B	B_1	d_1	Dynamic Radial $C_{1(4)}$	e	Y_1	Y_2	Dynamic Radial C_{90}	Dynamic Axial C_{a90}	Dynamic Radial $C_{90(4)}$	K Factor
mm in.	**mm** in.	**mm** in.	**mm** in.	**mm** in.	**mm** in.	**kN** lbf				**kN** lbf	**kN** lbf	**kN** lbf	
290.000 11.4170	**406.949** 16.0216	**288.000** 11.3386	**319.999** 12.5984	–	–	**4140** 932000	0.34	2.00	2.97	**308** 69300	**179** 40100	**1074** 242000	1.73
304.800 12.0000	**422.275** 16.6250	**296.863** 11.6875	**334.963** 13.1875	–	–	**4520** 1016000	0.34	2.00	2.97	**336** 75600	**194** 43600	**1172** 264000	1.73
328.480 12.9320	**447.675** 17.6250	**323.850** 12.7500	**414.338** 16.3125	**73.025** 2.8750	**388.938** 15.3125	**5840** 1312000	0.34	2.01	2.99	**435** 97800	**249** 56000	**1514** 340000	1.74
323.832 12.7499	**422.275** 16.6250	**261.424** 10.2923	**290.000** 11.4173	–	–	**3440** 772000	0.32	2.11	3.15	**256** 57500	**140** 31400	**890** 200000	1.83
339.935 13.3833	**469.900** 18.5000	**299.200** 11.7795	**349.999** 13.7795	–	–	**4980** 1122000	0.33	2.03	3.03	**372** 83500	**212** 47500	**1294** 290000	1.76
352.425 13.8750	**488.950** 19.2500	**342.900** 13.5000	**384.175** 15.1250	–	–	**6020** 1352000	0.34	2.01	2.99	**448** 101000	**257** 57700	**1560** 350000	1.74
358.775 14.1250	**488.950** 19.2500	**341.312** 11.8125	**341.313** 13.4375	–	–	**5260** 1182000	0.33	2.03	3.03	**391** 88000	**223** 50100	**1362** 306000	1.76
376.809 14.8350	**519.862** 20.4670	**342.900** 13.5000	**381.000** 15.0000	–	–	**6020** 1354000	0.33	2.03	3.03	**448** 101000	**255** 57400	**1560** 350000	1.76
391.071 15.3965	**549.948** 21.6515	**384.175** 15.1250	**428.625** 16.8750	–	–	**8580** 1926000	0.33	2.03	3.03	**638** 143000	**363** 81700	**2220** 500000	1.76
419.100 16.5000	**590.550** 23.2500	**419.100** 16.5000	**469.901** 18.5000	–	–	**9940** 2240000	0.33	2.03	3.03	**740** 166000	**421** 94800	**2580** 580000	1.76
453.390 17.8500	**635.000** 25.0000	**446.088** 17.5625	**496.888** 19.5625	–	–	**11400** 2560000	0.33	2.03	3.03	**849** 191000	**484** 109000	**2960** 664000	1.76
488.950 19.2500	**679.450** 26.7500	**476.250** 18.7500	**525.000** 21.0000	–	–	**13000** 2920000	0.33	2.03	3.03	**968** 218000	**551** 124000	**3360** 758000	1.76
508.000 20.0000	**695.325** 27.3750	**393.700** 15.5000	**450.850** 17.7500	–	–	**10700** 2400000	0.33	2.03	3.03	**796** 179000	**453** 102000	**2780** 624000	1.76
515.000 20.2750	**699.948** 27.5570	**370.000** 14.5669	**420.000** 16.5354	–	–	**9520** 2140000	0.35	1.95	2.91	**709** 159000	**420** 94500	**2460** 554000	1.69
530.225 20.8750	**736.600** 29.0000	**519.112** 20.4375	**579.438** 22.8125	–	–	**13140** 2960000	0.33	2.03	3.03	**978** 220000	**557** 125000	**3400** 766000	1.76

[1]The bore diameter (d) corresponds to the large bore.

Bearing Part No.			Design Type	Cage Type[2]	Mounting Dimensions					Weight
Single Cone (Smallest)	Single Cup	Double Cup			Max. Shaft Radius R	Cone Backing Diameter d_b	Max. Housing Radius r	Cup Backing Diameter D_b	Axial Cage Clearance A_b	
					mm in.	**mm** in.	**mm** in.	**mm** in.	**mm** in.	**kg** lbs.
M255429T	M255411	–	TQITS	P	**3.5** 0.14	**296.0** 11.65	**3.5** 0.14	**388.1** 15.28	**13.8** 0.54	**141** 312
HM256830T	–	HM256810D	TQIT	P	**6.4** 0.25	**316.0** 12.44	**1.5** 0.06	**403.0** 15.88	**10.5** 0.41	**157** 345
HM259030T	–	HM259011D	TQITE	P	**6.0** 0.24	**334.0** 13.15	**1.5** 0.06	**427.7** 16.84	**13.6** 0.54	**197** 435
LM258630T	LM258610	–	TQITS	S	**6.5** 0.26	**332.0** 13.07	**3.3** 0.13	**406.0** 15.98	**11.8** 0.46	**117** 258
M262430T	–	M262410D	TQIT	S	**3.3** 0.13	**347.0** 13.66	**1.5** 0.06	**450.8** 17.75	**12.6** 0.50	**194** 427
HM262730T	–	HM262710CD	TQIT	P	**6.4** 0.25	**364.0** 14.33	**1.5** 0.06	**467.0** 18.39	**3.6** 0.14	**240** 529
M263330T	–	M263310D	TQIT	P	**3.3** 0.13	**365.0** 14.37	**1.5** 0.06	**467.2** 18.39	**11.3** 0.45	**200** 440
M265330T	–	M265311D	TQIT	P	**3.3** 0.13	**383.0** 15.08	**3.2** 0.13	**498.9** 19.64	**9.4** 0.37	**248** 546
HM266432T	HM266413	–	TQITS	P	**6.4** 0.25	**403.0** 15.87	**1.5** 0.06	**525.0** 20.67	**3.7** 0.14	**352** 776
M268729T	–	M268710D	TQIT	P	**6.4** 0.25	**431.0** 16.97	**1.5** 0.06	**562.0** 22.13	**17.45** 0.69	**448** 988
M270730T	–	M270710CD	TQIT	P	**6.4** 0.25	**465.0** 18.31	**1.5** 0.06	**605.1** 23.82	**3.7** 0.15	**543** 1197
M272730T	–	M272710CD	TQIT	P	**6.4** 0.25	**500.0** 19.69	**1.5** 0.06	**648.0** 25.52	**3.8** 0.15	**661** 1458
LM274030T	–	LM274010D	TQIT	P	**6.4** 0.25	**522.0** 20.55	**1.5** 0.06	**663.0** 26.10	**20.8** 0.82	**541** 1192
NP228978	NP741618	–	TQITS	S	**6.0** 0.24	**531.0** 20.91	**6.0** 0.24	**672.0** 26.46	**3.6** 0.14	**483** 1064
M275330T	–	M275310D	TQIT	P	**6.4** 0.25	**540.0** 21.26	**1.5** 0.06	**702.3** 27.65	**19.6** 0.77	**863** 1902

[2]Cage type: S – Stamped steel, P – Pin type.

Continued on next page.

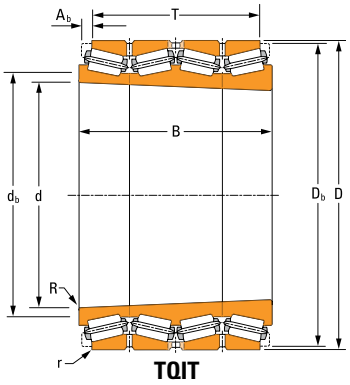

TQIT

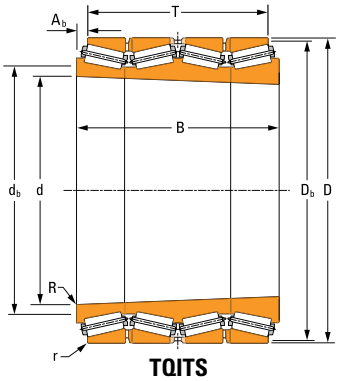

TQITS

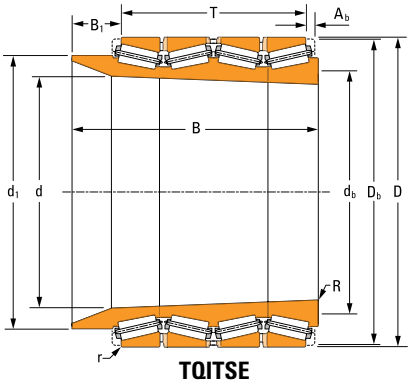

TQITSE

TABLE 55. TQITS PRODUCT DATA *– continued*

Bearing Dimensions						Load Ratings							
						One Million Revolutions				90 Million Revolutions			
Bore[1] d	O.D. D	Width over Cups T	Width over Cones B	B_1	d_1	Dynamic Radial $C_{1(4)}$	e	Y_1	Y_2	Dynamic Radial C_{90}	Dynamic Axial C_{a90}	Dynamic Radial $C_{90(4)}$	K Factor
mm in.	**mm** in.	**mm** in.	**mm** in.	**mm** in.	**mm** in.	**kN** lbf				**kN** lbf	**kN** lbf	**kN** lbf	
547.687 21.5625	**761.873** 29.9950	**536.575** 21.1250	**600.075** 23.6250	–	–	**13960** 3140000	0.33	2.03	3.03	**1040** 234000	**592** 133000	**3620** 814000	1.76
604.838 23.8125	**787.400** 31.0000	**369.888** 14.5625	**420.688** 16.5625	–	–	**9500** 2140000	0.33	2.03	3.03	**708** 159000	**403** 90600	**2460** 554000	1.76
644.525 25.3750	**857.250** 33.7500	**523.877** 20.6250	**590.550** 23.2500	–	–	**16360** 3680000	0.33	2.03	3.03	**1220** 274000	**694** 156000	**4240** 954000	1.76
669.671 26.3650	**933.450** 36.7500	**649.288** 25.5625	**725.488** 28.5625	–	–	**20400** 4580000	0.33	2.03	3.03	**1520** 342000	**865** 195000	**5300** 1190000	1.76
744.538 29.3125	**1035.050** 40.7500	**727.075** 28.6250	**812.800** 32.0000	–	–	**24800** 5580000	0.33	2.03	3.03	**1850** 416000	**1050** 237000	**6440** 1448000	1.76
749.300 29.5000	**990.600** 39.0000	**577.000** 22.7166	**650.000** 25.5906	–	–	**20800** 4680000	0.33	2.03	3.03	**1550** 349000	**883** 198000	**5400** 1214000	1.76
775.843 30.5450	**1040.000** 40.9449	**650.000** 25.5906	**800.000** 31.4960	**110.000** 4.3307	**899.950** 35.4311	**25400** 5720000	0.31	2.20	3.28	**1890** 426000	**989** 222000	**6600** 1482000	1.91
777.875 30.6250	**1079.500** 42.5000	**755.650** 29.7500	**844.550** 33.2500	–	–	**26800** 6020000	0.33	2.03	3.03	**1990** 448000	**1130** 255000	**6940** 1560000	1.76
828.675 32.6250	**1143.000** 45.0000	**733.425** 28.8750	**825.500** 32.5000	–	–	**28000** 6280000	0.33	2.03	3.03	**2080** 467000	**1180** 266000	**7240** 1628000	1.76
838.200 33.0000	**1143.000** 45.0000	**619.125** 24.3750	**711.200** 28.2500	–	–	**23000** 5160000	0.33	2.03	3.03	**1710** 384000	**972** 218000	**5940** 1336000	1.76
863.600 34.0000	**1130.300** 44.5000	**644.525** 25.3750	**717.551** 28.2500	–	–	**22800** 5100000	0.33	2.03	3.03	**1690** 380000	**963** 216000	**5880** 1324000	1.76
872.769 34.3610	**1181.100** 46.5000	**628.650** 24.7500	**714.375** 28.1250	–	–	**25000** 5600000	0.33	2.03	3.03	**1860** 418000	**1060** 238000	**6460** 1454000	1.76
895.350 35.2500	**1212.850** 47.7500	**784.225** 30.8750	**873.125** 34.3750	–	–	**31000** 6960000	0.33	2.03	3.03	**2310** 518000	**1310** 295000	**8020** 1804000	1.76
1013.630 39.9067	**1308.100** 51.5000	**730.250** 28.7500	**920.750** 36.2500	**225.425** 8.8750	**1193.800** 47.0000	**33200** 7480000	0.33	2.03	3.03	**2480** 557000	**1410** 317000	**8620** 1938000	1.76

[1]The bore diameter (d) corresponds to the large bore.

Bearing Part No.			Design Type	Cage Type[2]	Mounting Dimensions					Weight
Single Cone (Smallest)	Single Cup	Double Cup			Max. Shaft Radius R	Cone Backing Diameter d_b	Max. Housing Radius r	Cup Backing Diameter D_b	Axial Cage Clearance A_b	
					mm in.	**mm** in.	**mm** in.	**mm** in.	**mm** in.	**kg** lbs.
M276430T	M276410	–	TQITS	P	**6.4** 0.25	**558.0** 21.97	**1.5** 0.06	**725.6** 28.57	**18.5** 0.73	**928** 2046
LM280030T	–	LM280010D	TQIT	P	**6.4** 0.25	**621.0** 24.45	**1.5** 0.06	**759.0** 29.88	**18.5** 0.73	**578** 1275
LM281031T	LM281010	–	TQITS	P	**6.4** 0.25	**657.0** 25.87	**1.5** 0.06	**824.5** 32.46	**21.5** 0.85	**1033** 2277
M281631T	M281610	–	TQITS	P	**9.7** 0.38	**687.0** 27.05	**1.5** 0.06	**889.5** 35.02	**7.1** 0.28	**1675** 3692
M283430T	–	M283410D	TQIT	P	**9.7** 0.38	**762.0** 30.00	**1.5** 0.06	**985.2** 38.79	**29.3** 1.15	**2328** 5132
LM283630T	LM283610	–	TQITS	P	**6.4** 0.25	**762.0** 30.00	**3.3** 0.13	**952.4** 37.50	**7.2** 0.28	**1511** 3332
NP236431	NP250466	–	TQITSE	P	**10.0** 0.39	**789.0** 31.06	**4.0** 0.16	**994.0** 39.13	**6.7** 0.26	**1969** 4340
M284230T	–	M284210D	TQIT	P	**9.7** 0.38	**795.0** 31.30	**3.2** 0.13	**1028.3** 40.48	**33.0** 1.30	**2622** 5781
LM285546TD	–	LM285510D	TQIT	P	**4.8** 0.19	**861.0** 33.90	**3.3** 0.13	**1089.2** 42.88	**32.2** 1.27	**2664** 5874
NP317801	LM285710	–	TQITS	P	**9.7** 0.38	**858.0** 33.78	**9.7** 0.38	**1089.2** 42.88	**33.3** 1.31	**2259** 4981
LM286230T	LM286210	–	TQITS	P	**9.7** 0.38	**885.0** 34.84	**12.7** 0.50	**1090.4** 42.93	**28.2** 1.11	**2123** 4680
LM286433T	LM286410	–	TQITS	P	**9.7** 0.38	**894.0** 35.20	**12.7** 0.50	**1130.5** 44.51	**32.4** 1.28	**2430** 5357
LM286733T	LM286710	–	TQITS	P	**10.0** 0.39	**912.0** 35.91	**3.3** 0.13	**1163.6** 45.81	**7.4** 0.29	**3209** 7075
LM288130T	LM288110	–	TQITSE	P	**12.7** 0.50	**1030.0** 40.55	**3.3** 0.13	**1259.9** 49.60	**6.8** 0.27	**3186** 7025

[2]Cage type: S – Stamped steel, P – Pin type.

TWO-ROW TAPERED ROLLER BEARINGS

Two-row tapered roller bearing with a heavy-section outer race. Typically used as backup rolls in heavy-duty mills and leveler applications.

Please refer to Timken® Tapered Roller Bearing Catalog (order no. 10481) for more information.

TNASWH BEARINGS

Fig. 49. TNASWH bearing.

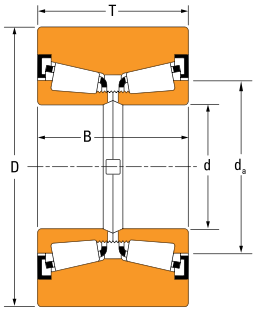

Fig. 50. TNASWH bearing.

OVERALL DIMENSIONS:

d – Bore diameter

D – Outer diameter

T – Cup width

B – Width over cones

d_a – Shaft shoulder diameter

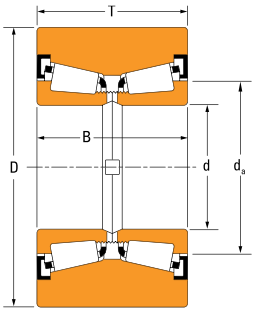

TNASWH

TABLE 56. TNASWH PRODUCT DATA

Bearing Dimensions				Load Ratings								K Factor
				One Million Revolutions				90 Million Revolutions			Static Radial	
Bore	O.D.	Width over Cups	Width over Cones	Dynamic Radial				Dynamic Radial		Dynamic Axial		
d	D	T	B	$C_{1(2)}$	e	Y_1	Y_2	C_{90}	C_{a90}	$C_{90(2)}$	$C_{0(2)}$	
mm in.	**mm** in.	**mm** in.	**mm** in.	**kN** lbf				**kN** lbf	**kN** lbf	**kN** lbf	**kN** lbf	
7.937 0.3125	**28.575** 1.1250	**21.463** 0.8450	**22.225** 0.8750	**13** 2800	0.32	2.11	3.15	**1.9** 417	**3.2** 726	**1.0** 228	**11** 2420	1.83
12.700 0.5000	**44.450** 1.7500	**26.988** 1.0625	**28.578** 1.1251	**22** 4860	0.45	1.49	2.22	**3.2** 724	**5.6** 1260	**2.5** 561	**23** 5160	1.29
15.875 0.6250	**50.800** 2.0000	**34.925** 1.3750	**36.515** 1.4376	**42** 9400	0.31	2.17	3.23	**6.2** 1400	**10.8** 2440	**3.3** 745	**43** 9560	1.88
19.050 0.7500	**63.500** 2.5000	**33.338** 1.3125	**34.928** 1.3751	**47** 10500	0.36	1.89	2.82	**6.9** 1560	**12.1** 2710	**4.2** 952	**51** 11440	1.64
20.637 0.8125	**76.200** 3.0000	**46.833** 1.8438	**48.423** 1.9064	**76** 17100	0.32	2.09	3.11	**11.3** 2540	**19.7** 4430	**6.3** 1410	**86** 19440	1.81
30.005 1.1813	**88.900** 3.5000	**49.212** 1.9375	**50.800** 2.0000	**88** 19800	0.35	1.93	2.87	**13.1** 2940	**22.8** 5130	**7.9** 1770	**108** 24200	1.67
38.100 1.5000	**107.950** 4.2500	**57.150** 2.2500	**58.735** 2.3124	**132** 29600	0.39	1.72	2.56	**19.6** 4400	**34.1** 7670	**13.2** 2960	**178** 40200	1.49
50.800 2.0000	**127.000** 5.0000	**68.265** 2.6876	**69.850** 2.7500	**226** 50800	0.33	2.04	3.04	**33.6** 7560	**58.6** 13200	**19.0** 4270	**322** 72400	1.77
53.975 2.1250	**127.000** 5.0000	**68.265** 2.6876	**69.850** 2.7500	**226** 50800	0.33	2.04	3.04	**33.6** 7560	**58.6** 13200	**19.0** 4270	**322** 72400	1.77
70.000 2.7559	**158.750** 6.2500	**73.025** 2.8750	**74.615** 2.9376	**250** 56100	0.38	1.75	2.61	**37.2** 8360	**64.7** 14600	**24.5** 5500	**372** 83800	1.52
85.725 3.3750	**158.750** 6.2500	**71.435** 2.8124	**73.025** 2.8750	**254** 57100	0.45	1.51	2.25	**37.8** 8500	**65.8** 14800	**28.8** 6470	**432** 97200	1.31
88.900 3.5000	**206.375** 8.1250	**103.185** 4.0624	**104.775** 4.1250	**570** 128000	0.34	1.97	2.94	**84.8** 19100	**148.0** 33200	**49.5** 11100	**882** 198400	1.71
88.900 3.5000	**206.375** 8.1250	**103.185** 4.0624	**104.775** 4.1250	**538** 121000	0.34	1.97	2.94	**80.1** 18000	**139.0** 31400	**46.8** 10500	**882** 198400	1.71
88.900 3.5000	**249.975** 9.8415	**101.600** 4.0000	**92.075** 3.6250	**376** 84600	0.44	1.52	2.27	**56.0** 12600	**97.5** 21900	**42.4** 9530	**638** 143200	1.32
101.600 4.0000	**260.350** 10.2500	**133.350** 5.2500	**136.525** 5.3750	**929** 209000	0.34	2.01	2.99	**138.0** 31100	**241.0** 54200	**79.3** 17800	**1384** 312000	1.74
114.300 4.5000	**311.150** 12.2500	**158.750** 6.2500	**142.875** 5.6250	**1180** 266000	0.33	2.07	3.08	**176.0** 39600	**307.0** 69000	**98,3** 22100	**1812** 408000	1.79
127.000 5.0000	**329.692** 12.9800	**127.000** 5.0000	**93.659** 3.6874	**466** 105000	0.31	2.20	3.28	**69.4** 15600	**121.0** 27200	**36.3** 8160	**986** 222000	1.91

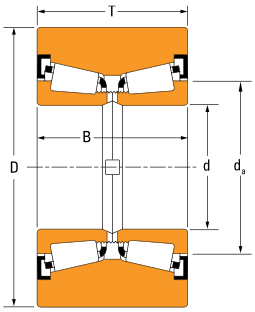

TNASWH

Bearing Part No.		Mounting Dimensions		Weight
Cone	Cup	Max. Shaft Radius R	Cone Backing Diameter d_a	
		mm in.	**mm** in.	**kg** lbs.
LL20949NW	K103254	**0.8** 0.03	**12.5** 0.49	**0.08** 0.18
A4051	K56570	**0.8** 0.03	**17.5** 0.69	**0.26** 0.56
NA03063SW	K90651	**0.8** 0.03	**20.5** 0.81	**0.42** 0.92
NA05076SW	K39214	**0.8** 0.03	**24.0** 0.94	**0.64** 1.43
NA12581SW	K38958	**1.5** 0.06	**28.5** 1.12	**1.41** 3.12
NA15117SW	K33867	**0.8** 0.03	**35.5** 1.40	**1.86** 4.09
NA24776SW	K78175	**0.8** 0.03	**45.0** 1.77	**2.96** 6.51
NA33889SW	K106797	**3.5** 0.14	**64.0** 2.52	**4.91** 10.82
NA33895SW	K302667	**3.5** 0.14	**67.0** 2.64	**4.79** 10.55
NA483SW	K88207	**3.5** 0.14	**83.0** 3.27	**7.90** 17.45
NA497SW	K109597	**3.5** 0.14	**101.0** 3.98	**6.66** 14.66
NA759SW	K312486	**3.5** 0.14	**106.0** 4.17	**21.87** 48.20
NA761SW	K312486	**3.5** 0.14	**108.0** 4.25	**21.82** 48.08
NA596SW	K516773	**3.5** 0.14	**104.0** 4.09	**30.74** 67.79
HH221449NW	K326068	**8.0** 0.31	**131.0** 5.16	**41.41** 91.30
HH224346NW	K110108	**3.5** 0.14	**136.0** 5.35	**69.23** 152.64
NA48290SW	K326053	**3.4** 0.14	**141.0** 5.55	**64.98** 143.26

TDIT – TNAT BEARINGS

Two-row tapered roller bearing with tapered bore. Typically used in light-duty or medium-duty mills combined with high rolling speeds.

Please refer to Timken® Tapered Roller Bearing Catalog (order no. 10481) for more information.

Fig. 51. TDIT bearing.

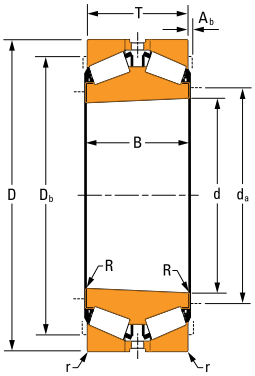

Fig. 52. TDIT bearing.

OVERALL DIMENSIONS:

d – Bore diameter

D – Outer diameter

T – Width over cups

B – Width over cones

R – Shaft maximum fillet radius

d_a or d_b – Shaft shoulder diameter

r – Housing maximum radius

D_a or D_b – Housing shoulder diameter

A_b – Axial cage clearance

TWO-ROW TAPERED ROLLER BEARING DESIGN TYPES TDIT – TNAT (TIGHT FIT MOUNTING)

TDIT

- One double cone with tapered bore.
- Two single cups.
- One cup spacer.

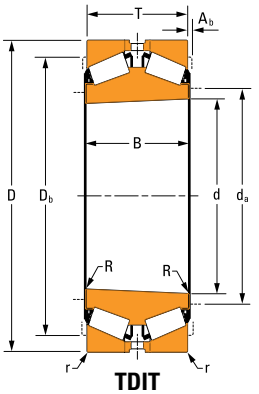

TDIT

TNAT

- Two single cones with tapered bore.
- One double cup with lubrication groove and holes.

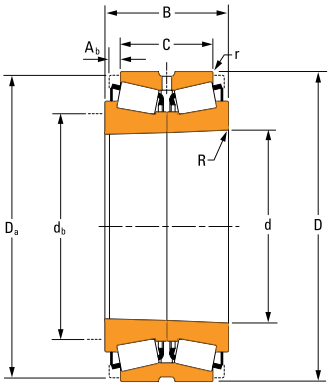

TNAT

TDITE

- One double cone with tapered bore and extended ribs.
- Two single cups.
- One cup spacer.

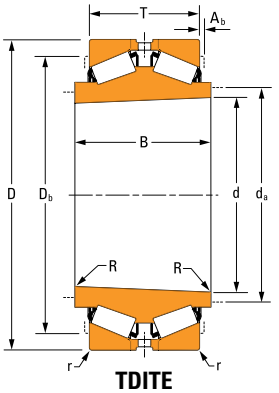

TDITE

TNATCD

- Two single cones with tapered bore.
- One CD-type double cup with lubrication grooves and holes, including one counterbored lubrication hole to accept anti-rotating pin.

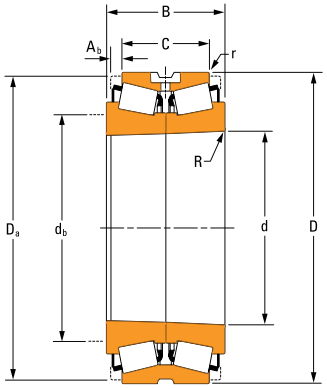

TNATCD

TNATDA

- Two single cones with tapered bore.
- One DA cup with a lubrication hole, including a counterbored to accept anti-rotating pin.

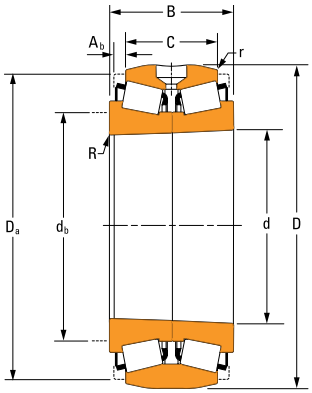

TNATDA

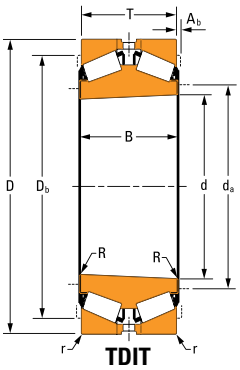

TDIT

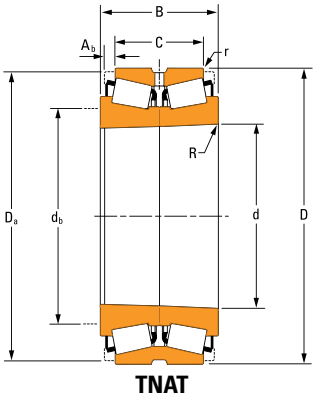

TNAT

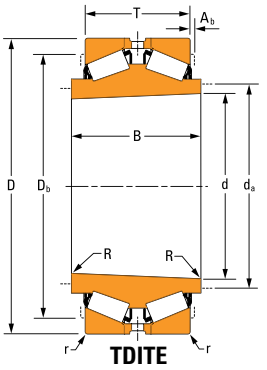

TDITE

TABLE 57. TDIT – TNAT PRODUCT DATA

Dimensions				Load Ratings								
				One Million Revolutions				90 Million Revolutions				
Bore d	O.D. D	Cup Width T (TDIT) C (TNAT)	Cone Width B	Dynamic Radial $C_{1(2)}$	e	Y_1	Y_2	Dynamic Radial C_{90}	Dynamic Radial $C_{90(2)}$	Dynamic Axial C_{a90}	K Factor	Static Radial $C_{0(2)}$
mm in.	**mm** in.	**mm** in.	**mm** in.	**kN** lbf				**kN** lbf	**kN** lbf	**kN** lbf		**kN** lbf
97.866 3.8530	**148.430** 5.8437	**52.385** 2.0624	**82.753** 3.2580	**263** 59000	0.49	1.37	2.04	**39.1** 8790	**68.1** 15300	**33.0** 7410	1.19	**482** 108600
100.211 3.9453	**168.275** 6.6250	**95.250** 3.7500	**95.250** 3.7500	**435** 97800	0.47	1.43	2.13	**64.8** 14600	**113** 25400	**52.2** 11700	1.24	**772** 173400
100.211 3.9453	**161.925** 6.3750	**96.042** 3.7812	**95.250** 3.7500	**367** 82600	0.47	1.42	2.11	**54.7** 12300	**95.3** 21400	**44.5** 10000	1.23	**686** 154000
101.600 4.0000	**190.500** 7.5000	**117.475** 4.6250	**127.000** 5.0000	**878** 197000	0.34	2.01	2.99	**131** 29400	**228** 51100	**74.9** 16800	1.74	**1384** 312000
104.775 4.1250	**180.975** 7.1250	**101.600** 4.0000	**104.775** 4.1250	**520** 117000	0.39	1.74	2.60	**77.5** 17400	**135** 30300	**51.1** 11500	1.51	**896** 202000
115.888 4.5625	**190.500** 7.5000	**107.950** 4.2500	**111.125** 4.3750	**598** 134000	0.42	1.61	2.41	**89.0** 20000	**155** 34800	**63.4** 14300	1.40	**1086** 244000
119.913 4.7210	**253.931** 9.9973	**144.018** 5.6700	**253.931** 9.9970	**402** 90300	0.33	2.03	3.03	**59.8** 13500	**104** 23400	**34.1** 7660	1.76	**844** 189800
125.412 4.9375	**206.375** 8.1250	**114.300** 4.5000	**114.300** 4.5000	**610** 137000	0.46	1.46	2.18	**90.8** 20400	**158** 35500	**71.3** 16000	1.27	**1186** 266000
127.000 5.0000	**182.562** 7.1875	**76.200** 3.0000	**76.200** 3.0000	**440** 99000	0.31	2.20	3.28	**65.6** 14700	**114** 25700	**34.3** 7700	1.91	**986** 222000
127.000 5.0000	**228.600** 9.0000	**160.338** 6.3125	**151.244** 5.9545	**618** 139000	0.74	0.91	1.36	**92.1** 20700	**160** 36000	**116** 26100	0.79	**972** 218000
127.000 5.0000	**228.600** 9.0000	**160.338** 6.3125	**151.244** 5.9545	**814** 183000	0.74	0.91	1.36	**121** 27200	**211** 47400	**153** 34300	0.79	**1346** 302000
133.350 5.2500	**203.200** 8.0000	**92.075** 3.6250	**92.075** 3.6250	**604** 136000	0.34	1.96	2.92	**90.0** 20200	**157** 35200	**53.0** 11900	1.70	**1250** 282000
133.350 5.2500	**234.950** 9.2500	**139.700** 5.5000	**152.400** 6.0000	**1030** 232000	0.37	1.82	2.72	**154** 34600	**268** 60300	**97.4** 21900	1.58	**1862** 418000
136.525 5.3750	**217.488** 8.5625	**123.825** 4.8750	**123.825** 4.8750	**628** 141000	0.49	1.38	2.06	**93.5** 21000	**163** 36600	**78.1** 17500	1.2	**1228** 276000

Bearing Part No.		Design Type	Cage Type[1]	Mounting Dimensions					Weight
Cone	Cup			Max. Shaft Radius R	Cone Backing Diameter d_a, d_b	Max. Housing Radius r	Cup Backing Diameter D_a, D_b	Cage Axial Clearance A_b	
				mm in.	**mm** in.	**mm** in.	**mm** in.	**mm** in.	**kg** lbs.
42343TDEE	42584	TDITE	S	**0.8** 0.03	**106.9** 4.21	**3.0** 0.12	**134.0** 5.28	**5.9** 0.23	**4.00** 8.00
688TD	672	TDIT	S	**0.8** 0.03	**113.0** 4.45	**3.3** 0.13	**149.0** 5.87	**3.0** 0.12	**8.00** 17.0
52394TD	52637	TDIT	S	**0.8** 0.03	**112.0** 4.41	**3.3** 0.13	**144.0** 5.67	**3.2** 0.13	**7.00** 15.0
HH221449TD	HH221410	TDIT	S	**0.8** 0.03	**116.0** 4.57	**3.3** 0.13	**171.0** 6.73	**4.8** 0.19	**15.0** 33.0
787TD	772	TDIT	S	**1.5** 0.06	**118.0** 4.65	**3.3** 0.13	**161.0** 6.34	**3.4** 0.13	**11.0** 25.0
71457TD	71750	TDIT	S	**1.5** 0.06	**129.0** 5.08	**3.3** 0.13	**171.0** 6.73	**4.1** 0.16	**11.0** 25.0
NP520058-NP712745	NP319428	TNAT	S	**3.6** 0.14	**132.0** 5.20	**0.8** 0.03	**239.0** 9.41	**0.0** 0.00	**36.0** 79.0
797TD	792	TDIT	S	**1.5** 0.06	**142.0** 5.59	**3.3** 0.13	**186.0** 7.32	**4.1** 0.16	**14.0** 31.0
48290TD	48220	TDIT	S	**1.5** 0.06	**137.0** 5.39	**3.3** 0.13	**168.0** 6.61	**2.3** 0.09	**7.00** 15.0
97501TD	97900	TDIT	S	**1.5** 0.06	**144.0** 5.67	**3.3** 0.13	**197.0** 7.76	**3.2** 0.13	**23.0** 51.0
HM926747TD	HM926710	TDIT	S	**1.5** 0.06	**143.0** 5.63	**3.3** 0.13	**200.0** 7.87	**3.2** 0.13	**24.0** 52.0
67390TD	67320	TDIT	S	**1.5** 0.06	**146.0** 5.75	**3.3** 0.13	**183.0** 7.20	**2.3** 0.09	**11.0** 24.0
95526TD	95925	TDIT	S	**1.5** 0.06	**151.0** 5.94	**3.3** 0.13	**209.0** 8.23	**6.4** 0.25	**25.0** 56.0
74539TD	74856	TDIT	S	**1.5** 0.06	**153.0** 6.02	**3.3** 0.13	**197.0** 7.76	**2.8** 0.11	**14.0** 31.0

[1]Cage type: S = Stamped, P = Pin type.

Continued on next page.

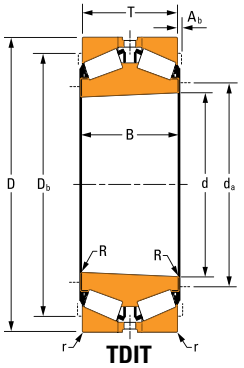

TDIT

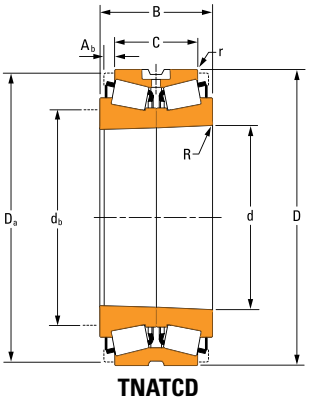

TNATCD

TABLE 57. TDIT – TNAT PRODUCT DATA *– continued*

Dimensions				Load Ratings								
				One Million Revolutions				90 Million Revolutions				Static Radial
Bore d	O.D. D	Cup Width T (TDIT) C (TNAT)	Cone Width B	Dynamic Radial $C_{1(2)}$	e	Y_1	Y_2	Dynamic Radial C_{90}	Dynamic Radial $C_{90(2)}$	Dynamic Axial C_{a90}	K Factor	$C_{0(2)}$
mm in.	**mm** in.	**mm** in.	**mm** in.	**kN** lbf				**kN** lbf	**kN** lbf	**kN** lbf		**kN** lbf
136.525 5.3750	**225.425** 8.8750	**120.650** 4.7500	**120.650** 4.7500	**1060** 239000	0.33	2.03	3.03	**158** 35600	**276** 62000	**90.2** 20300	1.76	**2100** 474000
142.875 5.6250	**200.025** 7.8750	**77.788** 3.0625	**74.612** 2.9375	**471** 106000	0.34	2.01	2.99	**70.1** 15800	**122** 27500	**40.4** 9080	1.74	**1120** 252000
147.638 5.8125	**304.800** 12.0000	**155.575** 6.1250	**142.875** 5.6250	**1610** 361000	0.73	0.92	1.37	**239** 53800	**416** 93600	**298** 67000	0.80	**2500** 564000
149.225 5.8750	**236.538** 9.3125	**106.362** 4.1875	**105.346** 4.1475	**847** 190000	0.44	1.52	2.27	**126** 28400	**220** 49400	**95.4** 21500	1.32	**1620** 364000
152.400 6.0000	**244.475** 9.6250	**120.650** 4.7500	**119.062** 4.6875	**661** 149000	0.35	1.92	2.85	**98.4** 22100	**171** 38500	**59.2** 13300	1.66	**1190** 268000
152.400 6.0000	**254.000** 10.0000	**120.650** 4.7500	**120.650** 4.7500	**1090** 244000	0.41	1.65	2.46	**162** 36300	**281** 63300	**113** 25300	1.43	**2060** 462000
152.400 6.0000	**222.250** 8.7500	**84.138** 3.3125	**84.138** 3.3125	**619** 139000	0.33	2.03	3.03	**92.2** 20700	**161** 36100	**52.5** 11800	1.76	**1336** 300000
155.575 6.1250	**247.650** 9.7500	**122.238** 4.8125	**122.238** 4.8125	**1100** 248000	0.37	1.83	2.73	**164** 36900	**286** 64200	**103** 23300	1.59	**2280** 514000
158.328 6.2334	**254.000** 10.0000	**101.600** 4.0000	**101.600** 4.0000	**893** 201000	0.32	2.11	3.15	**133** 29900	**231** 52000	**72.6** 16300	1.83	**1480** 332000
158.750 6.2500	**225.425** 8.8750	**79.375** 3.1250	**76.200** 3.0000	**499** 112000	0.38	1.75	2.61	**74.3** 16700	**129** 29100	**48.7** 11000	1.52	**1270** 286000
159.667 6.2861	**310.000** 12.2047	**114.500** 4.5079	**104.000** 4.0945	**1050** 236000	0.36	1.87	2.79	**156** 35100	**272** 61200	**96.4** 21700	1.62	**1734** 390000
161.000 6.3386	**231.775** 9.1250	**84.138** 3.3125	**90.488** 3.5625	**613** 138000	0.35	1.93	2.87	**91.3** 20500	**159** 35700	**54.6** 12300	1.67	**1378** 310000
165.100 6.5000	**269.875** 10.6250	**146.050** 5.7500	**146.050** 5.7500	**1490** 336000	0.33	2.03	3.03	**223** 50000	**387** 87100	**127** 28500	1.76	**3040** 682000
174.308 6.8625	**260.502** 10.2560	**133.350** 5.2500	**133.350** 5.2500	**769** 173000	0.33	2.04	3.04	**114** 25700	**199** 44800	**64.8** 14600	1.77	**1516** 340000

Bearing Part No.		Design Type	Cage Type[1]	Mounting Dimensions					Weight
Cone	Cup			Max. Shaft Radius R	Cone Backing Diameter d_a, d_b	Max. Housing Radius r	Cup Backing Diameter D_a, D_b	Cage Axial Clearance A_b	
				mm in.	**mm** in.	**mm** in.	**mm** in.	**mm** in.	**kg** lbs.
H228649TD	H228610	TDIT	S	**1.5** 0.06	**155.0** 6.10	**3.3** 0.13	**203.0** 7.99	**3.6** 0.14	**20.0** 44.0
48685TD	48620	TDIT	S	**0.8** 0.03	**152.0** 5.98	**3.3** 0.13	**185.0** 7.28	**3.2** 0.13	**7.00** 16.0
HH932147TD	HH932110	TDIT	S	**0.8** 0.03	**171.0** 6.73	**6.4** 0.25	**260.0** 10.24	**3.2** 0.13	**53.0** 117
82587TD	82931	TDIT	S	**1.5** 0.06	**165.0** 6.50	**3.3** 0.13	**213.0** 8.39	**3.2** 0.13	**18.0** 41.0
81604TD	81962	TDIT	S	**1.5** 0.06	**166.0** 6.54	**3.3** 0.13	**225.0** 8.86	**3.2** 0.13	**19.0** 42.0
99600TD	99100	TDIT	S	**1.5** 0.06	**170.0** 6.69	**3.3** 0.13	**227.0** 8.94	**4.8** 0.19	**26.0** 58.0
M231649TD	M231610	TDIT	S	**1.5** 0.06	**164.0** 6.46	**1.5** 0.06	**207.0** 8.15	**2.3** 0.09	**12.0** 26.0
H432549TD	H432510	TDIT	S	**1.5** 0.06	**174.0** 6.85	**3.3** 0.13	**224.0** 8.82	**0.0** 0.00	**24.0** 53.0
M235137TA-M235140TA	M235113CD	TNATCD	S	**3.5** 0.14	**175.0** 6.89	**1.5** 0.06	**240.0** 9.45	**10.5** 0.42	**19.0** 41.0
46780TD	46720	TDIT	S	**0.8** 0.03	**170.0** 6.69	**3.3** 0.13	**209.0** 8.23	**3.2** 0.13	**11.0** 23.0
NP850688	NP131522	TDIT	S	**1.5** 0.06	**182.0** 7.17	**4.0** 0.16	**284.0** 11.18	**3.2** 0.13	**40.0** 88.0
M333546TD	M333510	TDIT	S	**1.5** 0.06	**173.0** 6.81	**3.3** 0.13	**215.0** 8.46	**3.2** 0.13	**13.0** 28.0
H234649TD	H234610	TDIT	S	**1.5** 0.06	**185.0** 7.28	**3.3** 0.13	**244.0** 9.61	**4.6** 0.18	**36.0** 79.0
M236745TD	M236712	TDIT	S	**1.5** 0.06	**189.0** 7.44	**3.3** 0.13	**242.0** 9.53	**7.0** 0.28	**22.0** 48.0

[1]Cage type: S = Stamped, P = Pin type.

Continued on next page.

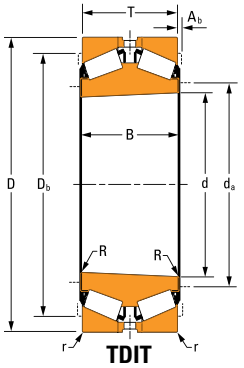

TDIT

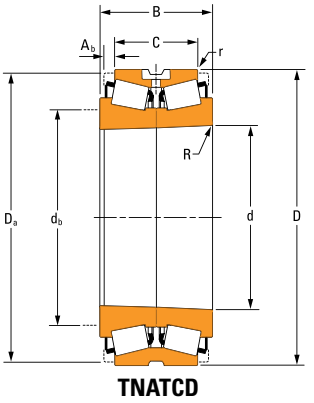

TNATCD

TABLE 57. TDIT – TNAT PRODUCT DATA *– continued*

Dimensions				Load Ratings								
				One Million Revolutions				90 Million Revolutions				
Bore d	O.D. D	Cup Width T (TDIT) C (TNAT)	Cone Width B	Dynamic Radial $C_{1(2)}$	e	Y_1	Y_2	Dynamic Radial C_{90}	Dynamic Radial $C_{90(2)}$	Dynamic Axial C_{a90}	K Factor	Static Radial $C_{0(2)}$
mm in.	**mm** in.	**mm** in.	**mm** in.	**kN** lbf				**kN** lbf	**kN** lbf	**kN** lbf		**kN** lbf
177.800 7.0000	**247.650** 9.7500	**90.488** 3.5625	**90.488** 3.5625	**666** 150000	0.44	1.53	2.29	**99.2** 22300	**173** 38800	**74.6** 16800	1.33	**1558** 350000
180.975 7.1250	**288.925** 11.3750	**158.750** 6.2500	**158.750** 6.2500	**1090** 244000	0.47	1.44	2.15	**162** 36300	**282** 63300	**130** 29100	1.25	**2140** 484000
180.975 7.1250	**288.925** 11.3750	**158.750** 6.2500	**158.750** 6.2500	**1350** 305000	0.32	2.11	3.15	**202** 45300	**351** 79000	**110** 24800	1.83	**2480** 556000
190.500 7.5000	**365.049** 14.3720	**158.750** 6.2500	**152.400** 6.0000	**1920** 432000	0.40	1.67	2.49	**286** 64300	**498** 112000	**197** 44200	1.45	**3640** 818000
193.675 7.6250	**284.162** 11.1875	**158.750** 6.2500	**158.750** 6.2500	**1000** 226000	0.36	1.88	2.80	**150** 33600	**260** 58500	**91.5** 20600	1.63	**2120** 478000
198.438 7.8125	**282.575** 11.1250	**87.313** 3.4375	**87.312** 3.4375	**697** 157000	0.51	1.33	1.98	**104** 23300	**181** 40600	**90.5** 20300	1.15	**1752** 394000
201.204 7.9214	**292.100** 11.5000	**101.600** 4.0000	**125.399** 4.9376	**1040** 235000	0.33	2.03	3.03	**156** 35000	**271** 60900	**88.5** 19900	1.76	**2340** 526000
206.375 8.1250	**336.550** 13.2500	**180.975** 7.1250	**184.150** 7.2500	**2230** 501000	0.33	2.03	3.03	**332** 74600	**578** 130000	**189** 42500	1.76	**4640** 1044000
209.550 8.2500	**317.500** 12.5000	**184.150** 7.2500	**184.150** 7.2500	**1200** 270000	0.52	1.29	1.92	**179** 40200	**312** 70100	**160** 36100	1.12	**2580** 580000
214.973 8.4635	**285.750** 11.2500	**85.420** 3.3630	**92.075** 3.6250	**707** 159000	0.48	1.39	2.08	**105** 23700	**183** 41200	**87** 19500	1.21	**1784** 400000
219.075 8.6250	**358.775** 14.1250	**196.850** 7.7500	**200.025** 7.8750	**2520** 566000	0.33	2.03	3.03	**375** 84200	**652** 147000	**213** 47900	1.76	**5260** 1184000
219.936 8.6589	**314.325** 12.3750	**115.888** 4.5625	**123.822** 4.8749	**1210** 272000	0.33	2.03	3.03	**180** 40500	**314** 70500	**103** 23100	1.76	**2740** 616000
222.250 8.7500	**355.600** 14.0000	**127.000** 5.0000	**130.175** 5.1250	**1250** 281000	0.59	1.14	1.70	**186** 41800	**324** 72800	**188** 42200	0.99	**2840** 638000
234.950 9.2500	**355.600** 14.0000	**184.150** 7.2500	**184.150** 7.2500	**1390** 312000	0.33	2.04	3.04	**206** 46400	**359** 80800	**117** 26200	1.77	**2800** 628000

Bearing Part No.		Design Type	Cage Type[1]	Mounting Dimensions					Weight
Cone	Cup			Max. Shaft Radius R	Cone Backing Diameter d_a, d_b	Max. Housing Radius r	Cup Backing Diameter D_a, D_b	Cage Axial Clearance A_b	
				mm in.	**mm** in.	**mm** in.	**mm** in.	**mm** in.	**kg** lbs.
67790TD	67720	TDIT	S	**1.5** 0.06	**191.0** 7.52	**3.3** 0.13	**229.0** 9.02	**2.8** 0.11	**14.0** 31.0
94713TD	94113	TDIT	S	**1.5** 0.06	**200.0** 7.87	**3.3** 0.13	**259.0** 10.20	**6.3** 0.25	**33.0** 74.0
HM237549TD	HM237510	TDIT	S	**1.5** 0.06	**198.1** 7.80	**3.3** 0.13	**266.0** 10.47	**5.1** 0.20	**36.0** 78.0
EE420750TD	421437	TDIT	S	**3.3** 0.13	**221.0** 8.70	**3.3** 0.13	**329.0** 12.95	**3.2** 0.13	**73.0** 161
82789TD	82722	TDIT	S	**3.3** 0.13	**212.0** 8.35	**3.3** 0.13	**263.0** 10.35	**5.4** 0.21	**30.0** 67.0
67980TD	67920	TDIT	S	**0.8** 0.03	**213.0** 8.39	**3.3** 0.13	**260.0** 10.24	**2.8** 0.11	**19.0** 42.0
M241544TA - M241547TA	M241510CD	TNATCD	S	**6.4** 0.25	**222.0** 8.74	**1.5** 0.06	**279.0** 10.98	**9.8** 0.39	**28.0** 61.0
H242649TD	H242610	TDIT	S	**1.5** 0.06	**231.0** 9.09	**3.3** 0.13	**306.0** 12.05	**4.6** 0.18	**49.0** 109
93826TD	93125	TDIT	S	**1.5** 0.06	**225.0** 8.86	**3.3** 0.13	**286.0** 11.26	**7.3** 0.29	**46.0** 100
LM742746TD	LM742710	TDIT	S	**1.5** 0.06	**228.0** 8.98	**3.3** 0.13	**266.0** 10.47	**3.3** 0.13	**16.0** 36.0
H244848TD	H244810XX	TDIT	S	**1.5** 0.06	**245.0** 9.65	**6.4** 0.25	**323.0** 12.72	**5.2** 0.20	**85.0** 187
M244246TD	M244210	TDIT	S	**1.5** 0.06	**235.0** 9.25	**3.3** 0.13	**293.0** 11.54	**4.0** 0.16	**32.0** 70.0
96876TD	96140	TDIT	S	**1.5** 0.06	**236.0** 9.29	**3.3** 0.13	**318.0** 12.52	**3.4** 0.13	**51.0** 112
EE130927TD	131400	TDIT	S	**1.5** 0.06	**251.0** 9.88	**1.5** 0.06	**329.0** 12.95	**4.6** 0.18	**54.0** 120

[1]Cage type: S = Stamped, P = Pin type.

Continued on next page.

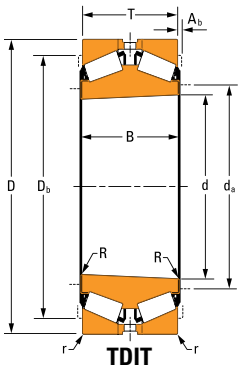

TDIT

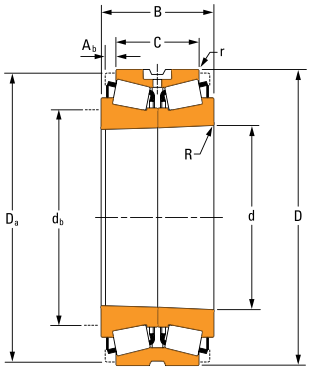

TNATCD

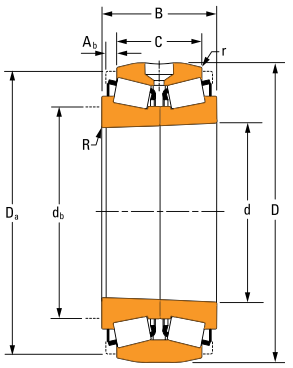

TNATDA

TABLE 57. TDIT – TNAT PRODUCT DATA *– continued*

Dimensions				Load Ratings								
				One Million Revolutions				90 Million Revolutions				
Bore d	O.D. D	Cup Width T (TDIT) C (TNAT)	Cone Width B	Dynamic Radial $C_{1(2)}$	e	Y_1	Y_2	Dynamic Radial C_{90}	Dynamic Radial $C_{90(2)}$	Dynamic Axial C_{a90}	K Factor	Static Radial $C_{0(2)}$
mm in.	**mm** in.	**mm** in.	**mm** in.	**kN** lbf				**kN** lbf	**kN** lbf	**kN** lbf		**kN** lbf
243.152 9.5729	**327.025** 12.8750	**92.075** 3.6250	**101.600** 4.0000	**987** 222000	0.32	2.10	3.13	**147** 33000	**256** 57500	**80.8** 18200	1.82	**2280** 514000
252.412 9.9375	**358.775** 14.1250	**130.175** 5.1250	**139.700** 5.5000	**1590** 358000	0.33	2.03	3.03	**237** 53300	**413** 92800	**135** 30300	1.76	**3700** 832000
263.525 10.3750	**400.050** 15.7500	**196.847** 7.7499	**192.088** 7.5625	**1440** 324000	0.39	1.71	2.54	**215** 48200	**374** 84000	**145** 32600	1.48	**2900** 652000
266.700 10.5000	**355.600** 14.0000	**107.950** 4.2500	**109.538** 4.3125	**1400** 315000	0.36	1.87	2.79	**209** 46900	**363** 81600	**129** 28900	1.62	**3020** 678000
269.875 10.6250	**381.000** 15.0000	**136.525** 5.3750	**136.525** 5.3750	**2000** 450000	0.33	2.03	3.03	**298** 67000	**519** 117000	**170** 38100	1.76	**4060** 910000
285.750 11.2500	**454.025** 17.8750	**117.475** 4.6250	**152.400** 6.0000	**1890** 426000	0.32	2.11	3.15	**282** 63400	**491** 110000	**154** 34700	1.83	**4100** 924000
288.925 11.3750	**406.400** 16.0000	**144.462** 5.6875	**144.462** 5.6875	**2070** 466000	0.34	2.00	2.97	**308** 69300	**537** 121000	**179** 40100	1.73	**5040** 1134000
295.275 11.6250	**406.400** 16.0000	**203.200** 8.0000	**203.200** 8.0000	**1340** 301000	0.44	1.52	2.27	**199** 44800	**347** 78100	**151** 33900	1.32	**3480** 784000
303.212 11.9375	**495.300** 19.5000	**263.525** 10.3750	**263.525** 10.3750	**5000** 1120000	0.33	2.03	3.03	**744** 167000	**1300** 291000	**423** 95200	1.76	**11300** 2540000
304.655 11.9943	**438.048** 17.2460	**131.762** 5.1875	**131.762** 5.1875	**1880** 422000	0.33	2.03	3.03	**280** 62900	**487** 110000	**159** 35700	1.76	**4120** 924000
304.800 12.0000	**422.275** 16.6250	**136.525** 5.3750	**174.625** 6.8750	**2260** 508000	0.34	2.00	2.97	**336** 75600	**586** 132000	**194** 43600	1.73	**5540** 1244000
316.111 12.4453	**447.675** 17.6250	**157.429** 6.1980	**173.035** 6.8124	**2920** 656000	0.34	2.01	2.99	**435** 97800	**757** 170000	**249** 56000	1.74	**6280** 1412000
333.375 13.1250	**469.900** 18.5000	**166.688** 6.5625	**166.688** 6.5625	**2780** 626000	0.34	2.01	2.99	**415** 93200	**722** 162000	**238** 53400	1.74	**6920** 1554000
346.075 13.6250	**488.950** 19.2500	**174.625** 6.8750	**174.625** 6.8750	**3010** 676000	0.34	2.01	2.99	**448** 101000	**780** 175000	**257** 57700	1.74	**7520** 1690000

Bearing Part No.		Design Type	Cage Type[1]	Mounting Dimensions					Weight
Cone	Cup			Max. Shaft Radius R	Cone Backing Diameter d_a, d_b	Max. Housing Radius r	Cup Backing Diameter D_a, D_b	Cage Axial Clearance A_b	
				mm in.	**mm** in.	**mm** in.	**mm** in.	**mm** in.	**kg** lbs.
LM247747TD	LM247710	TDIT	S	**1.5** 0.06	**256.0** 10.08	**3.3** 0.13	**310.0** 12.20	**4.8** 0.19	**24.0** 52.0
M249746TD	M249710	TDIT	S	**1.5** 0.06	**269.0** 10.59	**3.3** 0.13	**335.0** 13.19	**4.8** 0.19	**46.0** 101
EE221039TD	221575	TDIT	S	**1.5** 0.06	**282.0** 11.10	**6.4** 0.25	**366.0** 14.41	**3.2** 0.13	**71.0** 156
LM451349TD	LM451310	TDIT	S	**1.5** 0.06	**281.0** 11.06	**3.3** 0.13	**335.0** 13.19	**4.6** 0.18	**31.0** 68.0
M252349TD	M252310	TDIT	S	**1.5** 0.06	**287.0** 11.30	**3.3** 0.13	**356.0** 14.02	**4.8** 0.19	**51.0** 112
NA330107T-NA330112T	330178DA	TNATDA	P	**6.4** 0.25	**311.0** 12.24	**1.5** 0.06	**407.0** 16.02	**17.5** 0.69	**94.0** 206
M255449TD	M255410	TDIT	P	**3.3** 0.13	**310.0** 12.20	**3.3** 0.13	**379.0** 14.92	**7.1** 0.28	**62.0** 138
LM757043TD	LM757010	TDIT	S	**1.5** 0.06	**314.0** 12.36	**3.3** 0.13	**380.0** 14.96	**3.8** 0.15	**73.0** 160
HH258249TD	HH258210	TDIT	P	**3.3** 0.13	**340.0** 13.39	**6.4** 0.25	**448.0** 17.64	**10.9** 0.43	**220** 484
NP868174	329172	TDIT	S	**7.6** 0.30	**327.0** 12.87	**3.3** 0.13	**410.0** 16.14	**3.8** 0.15	**65.0** 144
HM256839TA-HM256849TA	HM256810DC	TNATCD	P	**6.4** 0.25	**326.0** 12.83	**1.5** 0.06	**403.0** 15.88	**14.1** 0.56	**75.0** 165
HM259045TD	HM259010	TDIT	P	**3.0** 0.12	**339.0** 13.35	**3.3** 0.13	**418.0** 16.46	**7.8** 0.31	**90.0** 198
HM261049TD	HM261010	TDIT	P	**3.3** 0.13	**357.0** 14.06	**3.3** 0.13	**439.0** 17.28	**8.0** 0.31	**101** 222
HM262749TD	HM262710	TDIT	P	**3.3** 0.13	**371.0** 14.61	**3.3** 0.13	**456.0** 17.95	**8.2** 0.32	**115** 254

[1]Cage type: S = Stamped, P = Pin type.

Continued on next page.

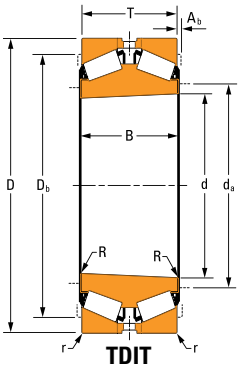

TDIT

TABLE 57. TDIT – TNAT PRODUCT DATA *– continued*

Dimensions				Load Ratings								
				One Million Revolutions				90 Million Revolutions				
Bore d	O.D. D	Cup Width T (TDIT) C (TNAT)	Cone Width B	Dynamic Radial $C_{1(2)}$	e	Y_1	Y_2	Dynamic Radial C_{90}	Dynamic Radial $C_{90(2)}$	Dynamic Axial C_{a90}	K Factor	Static Radial $C_{0(2)}$
mm in.	**mm** in.	**mm** in.	**mm** in.	**kN** lbf				**kN** lbf	**kN** lbf	**kN** lbf		**kN** lbf
347.662 13.6875	**469.900** 18.5000	**228.600** 9.0000	**228.600** 9.0000	**2490** 561000	0.33	2.03	3.03	**372** 83500	**647** 145000	**212** 47500	1.76	**5360** 1204000
349.250 13.7500	**457.200** 18.0000	**120.650** 4.7500	**120.650** 4.7500	**1640** 368000	0.32	2.11	3.15	**244** 54900	**425** 95500	**133** 29900	1.83	**4540** 1020000
368.300 14.5000	**523.875** 20.6250	**185.738** 7.3125	**185.738** 7.3125	**3960** 890000	0.33	2.03	3.03	**589** 132000	**1030** 231000	**335** 75400	1.76	**8680** 19540000
384.175 15.1250	**546.100** 21.5000	**193.675** 7.6250	**193.675** 7.6250	**4290** 963000	0.33	2.03	3.03	**638** 143000	**1110** 250000	**363** 81700	1.76	**9460** 2120000
415.925 16.3750	**590.550** 23.2500	**209.550** 8.2500	**209.550** 8.2500	**4970** 1120000	0.33	2.03	3.03	**740** 166000	**1290** 290000	**421** 94800	1.76	**11100** 2500000
431.800 17.0000	**571.500** 22.5000	**161.925** 6.3750	**161.925** 6.3750	**3320** 747000	0.44	1.53	2.29	**495** 111000	**862** 194000	**371** 83500	1.33	**8260** 1858000
447.675 17.6250	**635.000** 25.0000	**223.838** 8.8125	**223.838** 8.8125	**5370** 1210000	0.33	2.03	3.03	**799** 180000	**1390** 313000	**455** 102000	1.76	**11800** 2660000
457.200 18.0000	**730.148** 28.7460	**330.200** 13.0000	**330.200** 13.0000	**7050** 1580000	0.29	2.29	3.41	**1050** 236000	**1830** 411000	**529** 119000	1.98	**15260** 3440000
469.900 18.5000	**622.300** 24.5000	**254.000** 10.0000	**254.000** 10.0000	**3420** 768000	0.44	1.55	2.30	**509** 114000	**886** 199000	**379** 85300	1.34	**9840** 2220000
479.425 18.8750	**679.450** 26.7500	**238.125** 9.3750	**238.125** 9.3750	**6500** 1460000	0.33	2.03	3.03	**968** 218000	**1680** 379000	**551** 124000	1.76	**14800** 3320000
501.650 19.7500	**711.200** 28.0000	**250.825** 9.8750	**250.825** 9.8750	**6150** 1380000	0.33	2.03	3.03	**916** 206000	**1590** 358000	**521** 117000	1.76	**16140** 3640000
519.112 20.4375	**736.600** 29.0000	**258.762** 10.1875	**258.762** 10.1875	**6570** 1480000	0.33	2.03	3.03	**978** 220000	**1700** 383000	**557** 125000	1.76	**17340** 3900000
571.500 22.5000	**812.800** 32.0000	**185.750** 11.2500	**296.862** 11.6875	**7890** 1770000	0.33	2.03	3.03	**1180** 264000	**2050** 460000	**669** 150000	1.76	**21200** 4740000

Bearing Part No.		Design Type	Cage Type[1]	Mounting Dimensions					Weight
Cone	Cup			Max. Shaft Radius R	Cone Backing Diameter d_a, d_b	Max. Housing Radius r	Cup Backing Diameter D_a, D_b	Cage Axial Clearance A_b	
				mm in.	**mm** in.	**mm** in.	**mm** in.	**mm** in.	**kg** lbs.
M262448TD	M262410	TDIT	S	**3.3** 0.13	**369.0** 14.53	**3.3** 0.13	**443.0** 17.44	**6.3** 0.25	**100** 221
LM263145TD	LM263110	TDIT	S	**1.5** 0.06	**367.0** 14.45	**3.3** 0.13	**434.0** 17.09	**4.8** 0.19	**55.0** 121
HM265049TD	HM265010	TDIT	P	**3.3** 0.13	**394.0** 15.51	**6.4** 0.25	**487.0** 19.17	**8.5** 0.33	**138** 305
HM266449TD	HM266410	TDIT	P	**3.3** 0.13	**411.0** 16.18	**6.4** 0.25	**507.0** 19.96	**9.7** 0.38	**158** 348
M268749TD	M268710	TDIT	P	**3.3** 0.13	**444.0** 17.48	**6.4** 0.25	**548.9** 21.61	**10.8** 0.42	**199** 438
LM769349TD	LM769310	TDIT	P	**1.5** 0.06	**453.0** 17.83	**6.4** 0.25	**534.0** 21.02	**8.9** 0.35	**119** 263
NP217494	M270710	TDIT	S	**3.3** 0.13	**478.0** 18.82	**6.4** 0.25	**591.0** 23.27	**6.6** 0.26	**242** 534
EE726182TD	726287	TDIT	P	**6.4** 0.25	**501.0** 19.72	**6.4** 0.25	**674.9** 26.57	**12.8** 0.50	**518** 1141
LM671649TD	LM671610	TDIT	P	**3.3** 0.13	**497.0** 19.57	**6.4** 0.25	**579.0** 22.80	**0.0** 0.00	**196** 433
M272749TD	M272710	TDIT	P	**3.3** 0.13	**510.0** 20.08	**6.4** 0.25	**633.0** 24.92	**12.4** 0.49	**303** 669
M274149TD	M274110	TDIT	P	**3.3** 0.13	**534.0** 21.02	**6.4** 0.25	**663.0** 26.10	**13.3** 0.53	**347** 764
M275349TD	M275310	TDIT	P	**3.3** 0.13	**552.0** 21.73	**6.4** 0.25	**684.0** 26.93	**14.2** 0.55	**392** 864
M278748TD	M278710	TDIT	P	**3.3** 0.13	**609.0** 23.98	**6.4** 0.25	**756.0** 29.76	**10.6** 0.42	**521** 1148

[1]Cage type: S = Stamped, P = Pin type.

THRUST TAPERED ROLLER BEARINGS

Two-row tapered roller bearings designed with steep angles to accommodate thrust loads. The TDIK bearing is typically used in axial positions for work rolls when the axial loads are high and in backup roll thrust positions.

TDIK BEARINGS

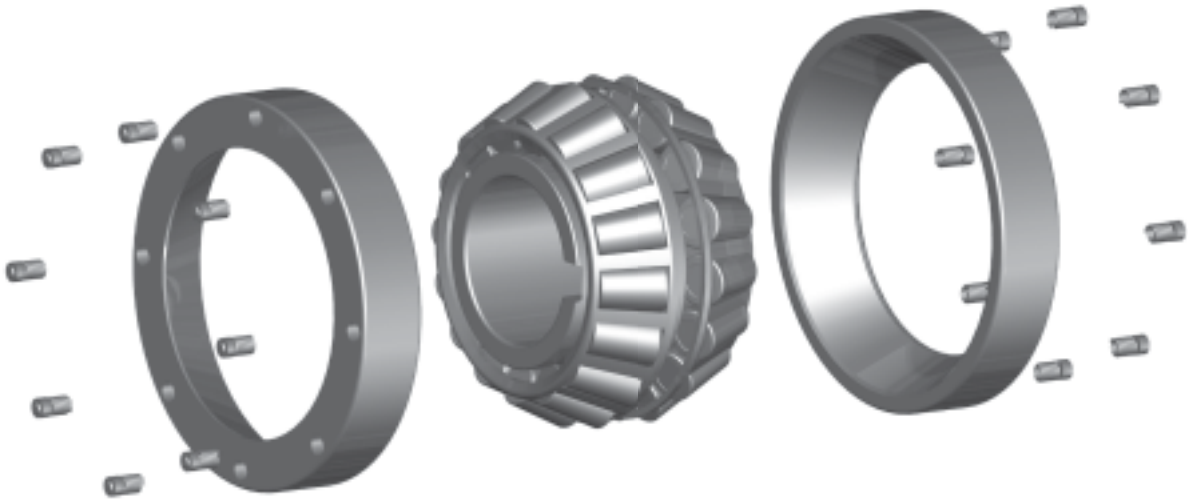

Fig. 53. TDIK bearing.

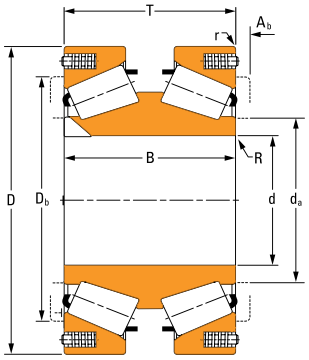

Fig. 54. TDIK bearing.

OVERALL DIMENSIONS:

d – Bore diameter

D – Outer diameter

T – Width over cups

B – Cone width

R – Shaft maximum fillet radius

d_a – Shaft shoulder diameter

r – Housing maximum radius

D_b – Housing shoulder diameter

A_b – Axial cage clearance

TWO-ROW THRUST TAPERED ROLLER BEARING DESIGN TYPES TDIK (LOOSE FIT MOUNTING)

TDIK-1

- One double cone with keyway.[1]
- Two single cups.

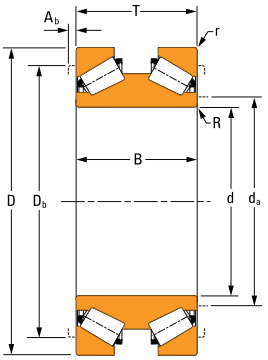

TDIK-1

TDIK-2

- One double cone with keyway.[1]
- Two single cups.
- One cup spacer.

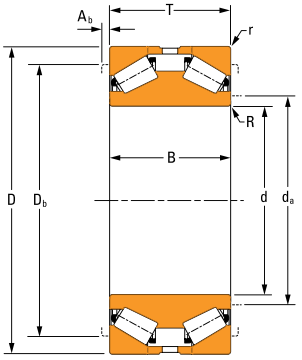

TDIK-2

TDIK-3

- One double cone with keyway.[1]
- Two single cups with spring-loading system.

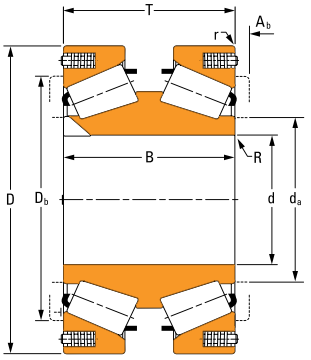

TDIK-3

[1]See page 175 for keyway types.

TDIKE

- One double cone with extended ribs and keyway.[1]
- Two cups.

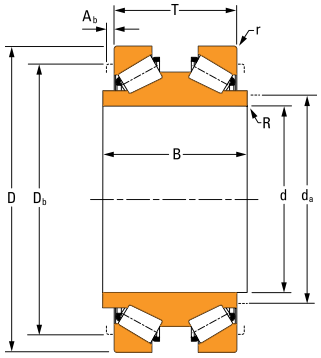

TDIKE

TDIKSC-1

- One double cone with extended ribs and keyway.[1]
- Two single cups with spring-loading system.
- Two seals.
- O-ring on cups.

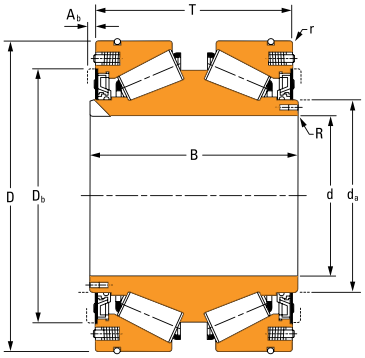

TDIKSC-1

TDIKSC-2

- One double cone with extended ribs and keyway.[1]
- Two single cups with spring-loading system.
- Two narrow seals.

[1]See keyway types below.

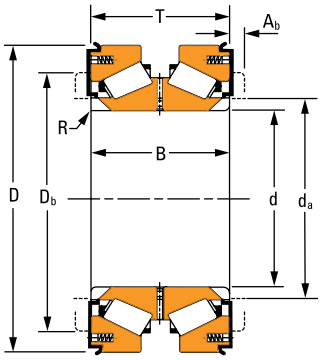

TDIKSC-2

KEYWAY TYPES

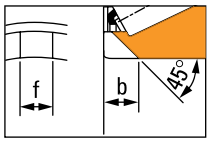

Type A.

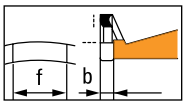

Type B.

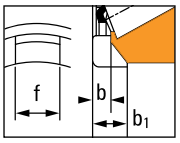

Type C.

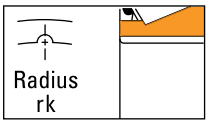

Type D.

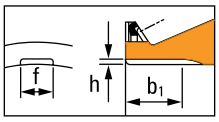

Type E.

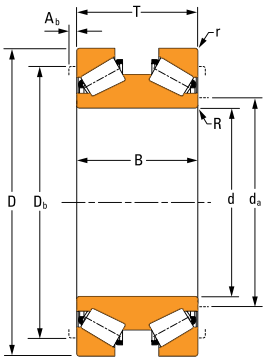

TDIK-1

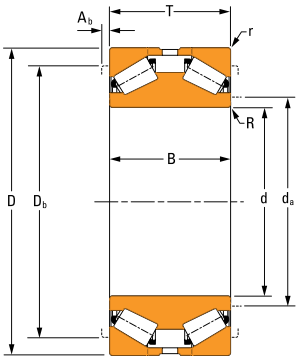

TDIK-2

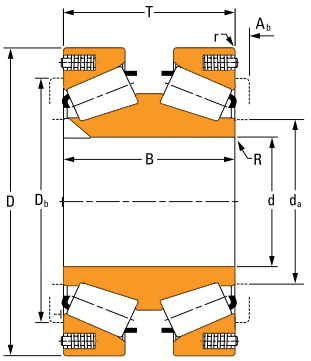

TDIK-3

TABLE 58. TDIK PRODUCT DATA

Bearing Dimensions				Load Ratings						
				One Million Revolutions			90 Million Revolutions			Static Axial
Bore d	O.D. D	Width over Cups T	Width over Cones B	Dynamic Radial $C_{1(2)}$	e	Y	Dynamic Axial C_{a90}	Dynamic Radial $C_{90(2)}$	K Factor	C_{a0}
mm in.	**mm** in.	**mm** in.	**mm** in.	**kN** lbf			**kN** lbf	**kN** lbf		**kN** lbf
31.750 1.2500	**69.012** 2.7170	**39.705** 1.5632	**49.200** 1.9370	**89.8** 20200	0.38	1.57	**8.7** 1970	**23.3** 5230	1.53	**68.7** 15400
36.512 1.4375	**72.000** 2.8346	**39.096** 1.5392	**49.200** 1.9370	**83.4** 18700	0.45	1.34	**9.4** 2120	**21.6** 4860	1.31	**74.8** 16800
49.212 1.9375	**93.264** 3.6718	**50.013** 1.9690	**67.488** 2.6570	**153** 34400	0.34	1.77	**13.2** 2970	**39.7** 8920	1.73	**99.7** 22400
54.988 2.1649	**140.030** 5.5130	**66.091** 2.6020	**65.989** 2.5980	**281** 63200	0.87	0.68	**62.1** 14000	**72.9** 16400	0.67	**487** 109000
61.912 2.4375	**110.000** 4.3307	**55.550** 2.1870	**73.025** 2.8750	**163** 36600	0.40	1.49	**16.7** 3750	**42.2** 9480	1.45	**146** 32900
101.600 4.0000	**250.825** 9.8750	**145.000** 5.7087	**145.000** 5.7087	**1320** 296000	0.69	0.86	**235** 52800	**342** 76800	0.84	**1690** 379000
127.000 5.0000	**225.425** 8.8750	**120.650** 4.7500	**120.650** 4.7500	**1130** 253000	0.33	1.80	**95.5** 21500	**292** 65700	1.76	**1020** 229000
127.792 5.0312	**228.600** 9.0000	**107.950** 4.2500	**107.950** 4.2500	**814** 183000	0.74	0.81	**153** 34300	**211** 47400	0.79	**1440** 325000
135 5.3150	**320** 12.5984	**160.05** 6.3012	**160** 6.2992	**1610** 361000	0.73	0.82	**298** 67000	**416** 93600	0.80	**2660** 598000
135 5.3150	**320** 12.5984	**160** 6.2992	**160** 6.2992	**1610** 361000	0.73	0.82	**298** 67000	**416** 93600	0.80	**2660** 598000
146.050 5.7500	**244.475** 9.6250	**87.414** 3.4415	**92.075** 3.6250	**699** 157000	0.35	1.70	**62.7** 14100	**181** 40800	1.66	**610** 137000
152.400 6.0000	**244.475** 9.6250	**87.312** 3.4375	**92.075** 3.6250	**699** 157000	0.35	1.70	**62.7** 14100	**181** 40800	1.66	**610** 137000
160 6.2992	**343** 13.5039	**160** 6.2992	**160** 6.2992	**1670** 376000	0.81	0.74	**345** 77500	**433** 97400	0.72	**3310** 744000
185 7.2835	**358** 14.0945	**150** 5.9055	**150** 5.9055	**1750** 393000	0.55	1.10	**243** 54700	**453** 102000	1.07	**2360** 530000
190.500 7.5000	**317.500** 12.5000	**134.061** 5.2780	**133.350** 5.2500	**1270** 286000	0.52	1.15	**170** 38200	**330** 74200	1.12	**1970** 442000

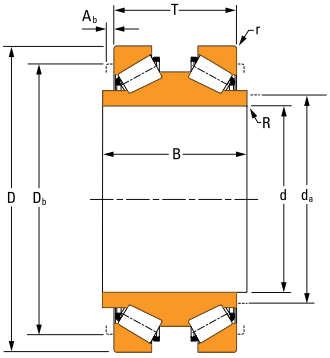

TDIKE

Bearing Part No.		Design Type	Key Type[1]	Mounting Dimensions					Keyway Dimensions					Weight
Cone	Cup			Max. Shaft Radius R	Cone Backing Diameter d_a	Max. Housing Radius r	Cup Backing Diameter D_b	Cage Axial Clearance A_b	f	b	b_1	r_k	h	
				mm in.	**mm** in.	**mm** in.	**mm** in.	**mm** in.	**mm** in.	**mm** in.	**mm** in.	**mm** in.	**mm** in.	**kg** lbs.
14125DW	14276	TDIKE	Type B	**0.8** 0.03	**38.5** 1.52	**1.3** 0.05	**60.0** 2.36	**1.7** 0.07	**19.1** 0.75	**4.8** 0.19	–	–	–	0.74 1.67
19144DW	19283	TDIKE	Type B	**0.8** 0.03	**42.5** 1.67	**1.5** 0.06	**63.0** 2.48	**1.8** 0.07	**20.6** 0.81	**5.6** 0.22	–	–	–	**0.68** 1.52
378DW	374	TDIKE	Type B	**0.8** 0.03	**56.0** 2.20	**1.3** 0.05	**85.0** 3.35	**3.9** 0.16	**28.6** 1.13	**7.1** 0.28	–	–	–	**1.44** 3.18
NP356365	78551	TDIK-2	Type A	**2.3** 0.09	**79.0** 3.11	**2.3** 0.09	**117.0** 4.61	**5.1** 0.20	**15.9** 0.63	**12.7** 0.50	–	–	–	**5.21** 11.5
392DW	394A	TDIKE	Type B	**0.8** 0.03	**70.0** 2.76	**1.3** 0.05	**101.0** 3.98	**2.9** 0.12	**34.9** 1.38	**8.7** 0.34	–	–	–	**2.14** 4.73
NP254512	NP659369	TDIK-1	Type B	**1.5** 0.06	**128.0** 5.04	**3.3** 0.13	**210.0** 8.27	**2.0** 0.08	**26.0** 1.02	**8.0** 0.32	–	–	–	**33.7** 74.3
H228643DW	H228610	TDIK-2	Type E	**1.5** 0.06	**144.0** 5.67	**3.3** 0.13	**203.0** 7.99	**3.6** 0.14	**9.4** 0.37	–	–	–	**4.8** 0.19	**21.6** 47.6
NP368572	NP520102	TDIK-1	Type B	**1.8** 0.07	**143.0** 5.63	**3.3** 0.13	**200.0** 7.87	**1.3** 0.05	**26.0** 1.02	**6.0** 0.24	–	–	–	**17.6** 38.8
JHH932136DW	JHH932119W	TDIK-3	Type A	**3.3** 0.13	**171.0** 6.73	**3.3** 0.13	**271.0** 10.67	**3.6** 0.14	**30.0** 1.18	**25.0** 0.98	–	–	–	**60.9** 134
NP651103	NP385077	TDIK-3	Type C	**3.3** 0.13	**171.0** 6.73	**3.3** 0.13	**271.0** 10.67	**3.6** 0.14	**30.0** 1.18	–	**25.0** 0.98	–	–	**60.0** 133
81577DW	81962	TDIK-1	Type E	**3.3** 0.13	**165.1** 6.50	**3.3** 0.13	**225.0** 8.86	**3.1** 0.12	**15.7** 0.62	–	**22.2** 0.88	–	**3.2** 0.13	**15.3** 33.7
81602DW	81962	TDIK-1	Type E	**1.5** 0.06	**166.1** 6.54	**3.3** 0.13	**225.0** 8.86	**3.2** 0.13	**16.0** 0.63	–	**22.2** 0.88	–	**3.2** 0.13	**14.2** 31.4
AAAC529	AAAC755	TDIK-3	Type A	**3.3** 0.13	**192.0** 7.56	**6.4** 0.25	**288.0** 11.34	**4.1** 0.16	**30.0** 1.18	**25.0** 0.98	–	–	–	**67.0** 147
J607073DW	J607141	TDIK-1	Type C	**3.3** 0.13	**223.0** 8.78	**3.3** 0.13	**316.0** 12.44	**8.0** 0.32	**30.0** 1.18	**27.0** 1.06	–	–	–	**66.8** 147
93751DW	93125	TDIK-2	Type D	**6.4** 0.25	**222.0** 8.74	**3.3** 0.13	**286.0** 11.26	**10.1** 0.40	–	–	–	**7.9** 0.31	–	**42.0** 92.7

[1]See page 175 for keyway types.

Continued on next page.

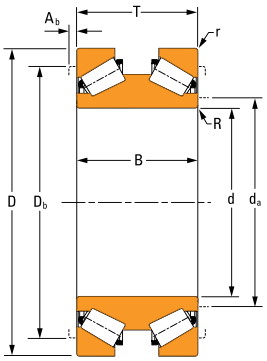

TDIK-1

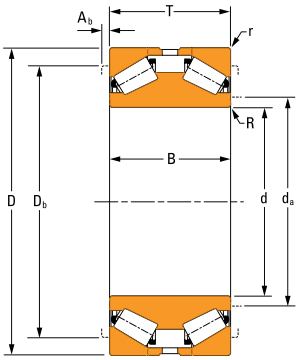

TDIK-2

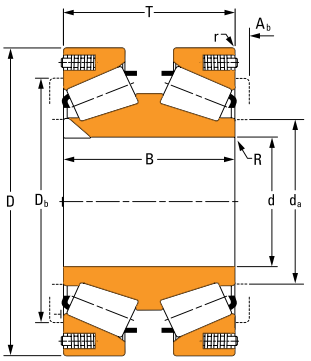

TDIK-3

TABLE 58. TDIK PRODUCT DATA *– continued*

Bearing Dimensions				Load Ratings						
				One Million Revolutions			90 Million Revolutions			Static Axial
Bore d	O.D. D	Width over Cups T	Width over Cones B	Dynamic Radial $C_{1(2)}$	e	Y	Dynamic Axial C_{a90}	Dynamic Radial $C_{90(2)}$	K Factor	C_{a0}
mm in.	**mm** in.	**mm** in.	**mm** in.	**kN** lbf			**kN** lbf	**kN** lbf		**kN** lbf
200 7.8740	**385** 15.1575	**200** 7.8740	**265** 10.4330	**2630** 591000	0.75	0.80	**502** 113000	**682** 153000	0.78	**4920** 1110000
215.900 8.5000	**355.600** 14.0000	**127.000** 5.0000	**130.175** 5.1250	**1320** 297000	0.59	1.01	**199** 44700	**343** 77000	0.99	**2440** 548000
230 9.0551	**404** 15.9055	**152** 5.9843	**144** 5.6692	**1760** 395000	1.04	0.57	**471** 106000	**456** 103000	0.56	**4520** 1020000
250.825 9.8750	**381.000** 15.0000	**136.525** 5.3750	**136.525** 5.3750	**2000** 450000	0.33	1.80	**170** 38100	**519** 117000	1.76	**1960** 441000
250.825 9.8750	**431.724** 16.9970	**145.359** 5.7228	**139.700** 5.5000	**2610** 587000	0.33	1.80	**221** 49700	**677** 152000	1.76	**1960** 441000
260 10.2362	**425** 16.7323	**215** 8.4640	**215** 8.4645	**2070** 466000	0.60	0.99	**319** 71800	**537** 121000	0.97	**3540** 795000
279.400 11.0000	**482.600** 19.0000	**177.800** 7.0000	**177.800** 7.0000	**2210** 497000	0.99	0.60	**553** 124000	**573** 129000	0.59	**6190** 1390000
279.400 11.0000	**495.300** 19.5000	**137.952** 5.4312	**120.650** 4.7500	**2700** 607000	0.40	1.49	**277** 62200	**700** 157000	1.45	**2450** 551000
298.450 11.7500	**447.675** 17.6250	**158.750** 6.2500	**158.750** 6.2500	**2920** 656000	0.34	1.78	**249** 56000	**757** 170000	1.74	**3060** 689000
300 11.8110	**440** 17.3228	**105** 4.1339	**105** 4.1339	**1160** 260000	0.87	0.68	**258** 58000	**300** 67400	0.67	**2930** 658000
300 11.8110	**471** 18.5433	**180** 7.0866	**180** 7.0866	**2370** 533000	0.82	0.73	**494** 111000	**615** 138000	0.71	**5970** 1340000
300 11.8110	**479.5** 18.8779	**180** 7.0866	**180** 7.0866	**2370** 533000	0.82	0.73	**494** 111000	**615** 138000	0.71	**5970** 1340000
304.800 12.0000	**495.300** 19.5000	**171.450** 6.7500	**165.100** 6.5000	**2940** 660000	0.40	1.49	**301** 67700	**762** 171000	1.45	**2990** 671000
305.000 12.0079	**559.816** 22.0400	**200** 7.8740	**273.050** 10.7500	**2790** 627000	1.08	0.55	**775** 174000	**723** 163000	0.54	**8180** 1840000
305.000 12.0079	**559.867** 22.0420	**176.352** 6.9430	**273.050** 10.7500	**2690** 605000	0.87	0.68	**594** 134000	**698** 157000	0.67	**6130** 1380000

Bearing Part No.		Design Type	Key Type[1]	Mounting Dimensions					Keyway Dimensions					Weight
Cone	Cup			Max. Shaft Radius R	Cone Backing Diameter d_a	Max. Housing Radius r	Cup Backing Diameter D_b	Cage Axial Clearance A_b	f	b	b_1	r_k	h	
				mm in.	**mm** in.	**mm** in.	**mm** in.	**mm** in.	**mm** in.	**mm** in.	**mm** in.	**mm** in.	**mm** in.	**kg** lbs.
NP537120	NP400534	Special[2]	Type A	**3.3** 0.13	**237.0** 9.33	**3.3** 0.13	**332.0** 13.07	**32.5** 1.28	**30.0** 1.18	**25.0** 0.98	–	–	–	**111** 245
NP820918	96140	TDIK-2	Type A	**6.4** 0.25	**249.0** 9.80	**3.3** 0.13	**318.0** 12.52	**3.4** 0.13	**32.0** 1.26	**20.0** 0.79	–	–	–	**51.1** 113
NP227916	NP950720	TDIK-3	Type C	**3.0** 0.12	**263.0** 10.35	**2.0** 0.08	**348.0** 13.70	**3.2** 0.13	**30.0** 1.18	**9.0** 0.35	**20.0** 0.78	–	–	**76.0** 167
M252338DW	M252310	TDIK-1	Type D	**3.3** 0.13	**276.1** 10.87	**3.3** 0.13	**356.0** 14.02	**4.8** 0.19	–	–	–	**9.5** 0.37	–	**56.0** 124
HM252340DW	HM252315	TDIK-1	Type D	**3.5** 0.14	**278.0** 10.94	**3.5** 0.14	**397.0** 15.63	**6.4** 0.25	–	–	–	**6.3** 0.25	–	**84.0** 186
J435101DW	J435167X	Special[2]	Type A	**3.0** 0.12	**288.0** 11.34	**3.0** 0.12	**379.0** 14.92	**0.0** 0.00	**32.0** 1.26	**19.0** 0.12	–	–	–	**90.0** 200
NP593022	NP323935	Special[2]	Type A	**4.8** 0.19	**321.0** 12.64	**1.0** 0.04	**423.0** 16.65	**0.0** 0.00	**32.0** 1.26	**12.0** 0.47	–	–	–	**148** 327
941102DW	941950	TDIK-1	Type A	**1.5** 0.06	**310.0** 12.20	**3.3** 0.13	**459.0** 18.07	**3.2** 0.13	**15.7** 0.62	**15.7** 0.62	–	–	–	**107** 235
HM259038DW	HM259010	TDIK-1	Type D	**3.3** 0.13	**326.0** 12.83	**3.3** 0.13	**418.0** 16.46	**7.2** 0.28	–	–	–	**9.5** 0.37	–	**92.0** 202
NP809306	NP809307	TDIK-1	Type A	**4.0** 0.16	**328.0** 12.91	**4.0** 0.16	**404.0** 15.91	**2.0** 0.08	**32.1** 1.26	**22.2** 0.87	–	–	–	**47.0** 103
JHM957540DW	JHM957518W	TDIK-3	Type A	**2.5** 0.10	**330.0** 12.99	**3.3** 0.13	**424.0** 16.69	**0.0** 0.00	**51.3** 2.02	**25.4** 1.00	–	–	–	**110** 238
JHM957540DW	JHM957519W	TDIK-3	Type A	**2.5** 0.10	**330.0** 12.99	**4.0** 0.16	**427.0** 16.81	**0.0** 0.00	**51.3** 2.02	**25.4** 1.00	–	–	–	**116** 256
EE724121D	NP273754	TDIK-1	Cup Keyed	**3.3** 0.13	**334.0** 13.15	**6.4** 0.25	**450.0** 17.72	**3.8** 0.15	–	–	–	–	–	**120** 265
HM959349D	HM959318	Special[2]	No Key	**3.3** 0.13	**348.5** 13.72	**4.8** 0.19	**478.0** 18.82	**57.3** 2.26	–	–	–	–	–	**219** 484
HM959649D	HM959618	Special[2]	No Key	**3.3** 0.13	**345.9** 13.62	**4.8** 0.19	**485.0** 19.09	**54.6** 2.15	–	–	–	–	–	**187** 412

[1]See page 175 for keyway types.
[2]Contact your Timken engineer for support on this bearing type.

Continued on next page.

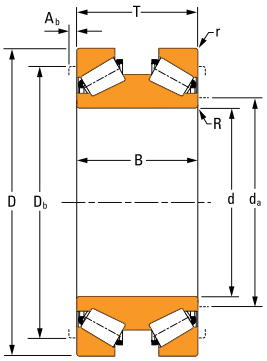

TDIK-1

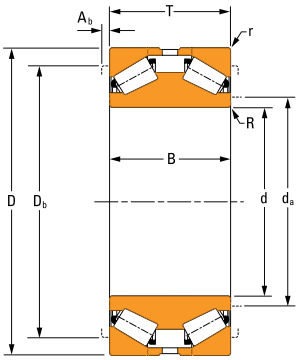

TDIK-2

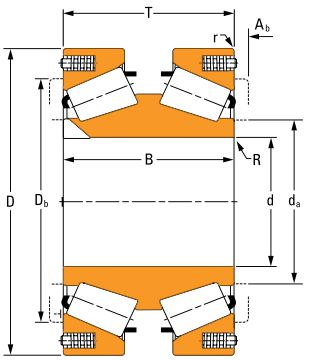

TDIK-3

TABLE 58. TDIK PRODUCT DATA *– continued*

Bearing Dimensions				Load Ratings						
				One Million Revolutions			90 Million Revolutions			Static Axial
Bore d	O.D. D	Width over Cups T	Width over Cones B	Dynamic Radial $C_{1(2)}$	e	Y	Dynamic Axial C_{a90}	Dynamic Radial $C_{90(2)}$	K Factor	C_{a0}
mm in.	**mm** in.	**mm** in.	**mm** in.	**kN** lbf			**kN** lbf	**kN** lbf		**kN** lbf
305.034 12.0092	**499.948** 19.6830	**200.025** 7.8750	**200.025** 7.8750	**2370** 532000	0.87	0.68	**522** 117000	**613** 138000	0.67	**6410** 1440000
305.034 12.0092	**499.948** 19.6830	**200.025** 7.8750	**200.025** 7.8750	**2370** 532000	0.87	0.68	**522** 117000	**613** 138000	0.67	**6410** 1440000
305.054 12.0100	**499.948** 19.6830	**200.025** 7.8750	**200.025** 7.8750	**2370** 532000	0.87	0.68	**522** 117000	**613** 138000	0.67	**6410** 1440000
305.054 12.0100	**499.948** 19.6830	**200.025** 7.8750	**200.025** 7.8750	**2330** 523000	1.17	0.51	**695** 156000	**603** 136000	0.50	**6440** 1450000
305.034 12.0092	**529.500** 20.8646	**200.000** 7.8740	**200.000** 7.8740	**2370** 532000	0.98	0.57	**522** 117000	**613** 138000	0.67	**6410** 1440000
330 12.9921	**520** 20.4724	**180** 7.0866	**180** 7.0866	**2870** 644000	0.87	0.68	**633** 142000	**743** 167000	0.67	**6830** 1540000
340 13.3858	**460** 18.1102	**160** 6.2992	**160** 6.2992	**1430** 322000	0.71	0.84	**260** 58500	**371** 83500	0.82	**4020** 905000
342.900 13.5000	**482.600** 19.0000	**131.765** 5.1876	**127.000** 5.0000	**1530** 345000	0.42	1.42	**165** 37100	**398** 89500	1.39	**2190** 493000
355.600 14.0000	**533.400** 21.0000	**200.025** 7.8750	**200.025** 7.8750	**3470** 781000	0.67	0.89	**597** 134000	**901** 203000	0.87	**7190** 1620000
360 14.1732	**480** 18.8976	**160** 6.2992	**160** 6.2992	**1760** 396000	0.47	1.27	**213** 47800	**457** 103000	1.24	**3050** 686000
365.600 14.3937	**514.350** 20.2500	**140.000** 5.5118	**140.000** 5.5118	**1750** 394000	0.74	0.81	**330** 74300	**455** 102000	0.79	**4800** 1080000
368.300 14.5000	**596.900** 23.5000	**165.100** 6.5000	**158.750** 6.2500	**3090** 694000	0.41	1.44	**326** 73400	**801** 180000	1.41	**3650** 821000
374.650 14.7500	**499.745** 19.6750	**130.175** 5.1250	**120.650** 4.7500	**1860** 417000	0.47	1.27	**224** 50300	**481** 108000	1.24	**3020** 679000
380 14.9606	**548** 21.5748	**180** 7.0866	**180** 7.0866	**2510** 563000	0.78	0.77	**499** 112000	**650** 146000	0.75	**7550** 1700000
380 14.9606	**567.5** 22.3425	**180** 7.0866	**180** 7.0866	**3520** 791000	0.73	0.82	**657** 148000	**913** 205000	0.80	**8180** 1840000

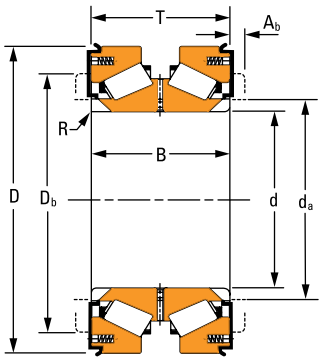

TDIKSC-2

Bearing Part No.		Design Type	Key Type[1]	Mounting Dimensions					Keyway Dimensions					Weight
Cone	Cup			Max. Shaft Radius R	Cone Backing Diameter d_a	Max. Housing Radius r	Cup Backing Diameter D_b	Cage Axial Clearance A_b	f	b	b_1	r_k	h	
				mm in.	**mm** in.	**mm** in.	**mm** in.	**mm** in.	**mm** in.	**mm** in.	**mm** in.	**mm** in.	**mm** in.	**kg** lbs.
HM959738DW	HM959710	TDIK-1	Type D	**3.3** 0.13	**350.0** 13.78	**6.4** 0.25	**442.0** 17.40	**0.0** 0.00	**51.3** 2.02	**17.5** 0.69	**34.9** 1.38	**8.1** 0.32	–	**143** 315
HM959740DW	HM959710	TDIK-1	Type C	**3.3** 0.13	**345.9** 13.62	**6.4** 0.25	**442.0** 17.40	**0.0** 0.00	**51.3** 2.02	**17.5** 0.69	**34.9** 1.38	–	–	**151** 332
HM959740DW	HM959710X	TDIK-3	Type C	**3.3** 0.13	**345.9** 13.62	**4.0** 0.16	**442.0** 17.40	**0.0** 0.00	**51.3** 2.02	**17.5** 0.69	**34.9** 1.38	–	–	**142** 313
M959442DW	M959410	TDIK-2	Type D	**6.4** 0.25	**348.2** 13.71	**6.4** 0.25	**438.0** 17.24	**0.0** 0.00	–	–	–	**8.1** 0.32	–	**150** 330
HM959739DW	HM959719X	TDIKSC-2	Type A	**6.4** 0.25	**346.0** 13.62	**1.5** 0.06	**453.0** 17.83	**0.0** 0.00	**25.4** 1.00	**32.9** 1.29	–	–	–	**169** 371
NP738398	NP869543	TDIK-3	Type B	**3.0** 0.12	**365.0** 14.37	**3.0** 0.12	**463.0** 18.23	**0.8** 0.03	**30.0** 1.18	**12.0** 0.47	–	–	–	**138** 304
NP483632	NP260921	TDIK-2	Type B	**1.5** 0.06	**361.0** 14.21	**3.3** 0.13	**427.0** 16.81	**0.0** 0.00	**32.0** 1.26	**11.7** 0.46	–	–	–	**74.0** 163
EE204135DW	204190	TDIK-2	Type D	**1.5** 0.06	**364.0** 14.33	**3.3** 0.13	**455.0** 17.91	**3.2** 0.13	–	–	–	**9.5** 0.38	–	**72.0** 159
NP819331	NP858984	TDIK-1	Type A	**3.3** 0.13	**389.0** 15.31	**6.4** 0.25	**481.0** 18.94	**5.2** 0.20	**51.3** 2.02	**25.4** 1.00	–	–	–	**153** 337
NP418468	NP728382	TDIK-2	Type B	**1.5** 0.06	**378.0** 14.88	**3.3** 0.13	**454.0** 17.87	**0.0** 0.00	**32.0** 1.26	**11.7** 0.46		–	–	**76.0** 167
NP468643	NP455898	TDIK-3	Type A	**2.5** 0.10	**390.0** 15.35	**4.1** 0.16	**468.0** 18.43	**1.0** 0.04	**40.0** 1.58	**20.0** 0.78	–	–	–	**88.0** 194
EE181454DW	182350	TDIK-2	Type D	**6.4** 0.25	**408.0** 16.06	**6.4** 0.25	**552.0** 21.73	**11.5** 0.45	–	–	–	**9.4** 0.37	–	**177** 391
LM765148DW	LM765111	TDIK-1	Type B	**3.3** 0.13	**397.0** 15.63	**3.3** 0.13	**471.0** 18.54	**3.2** 0.13	**50.0** 1.97	**9.0** 0.35	–	–	–	**63.0** 139
NP961802	NP873663	TDIK-2	Type B	**2.0** 0.08	**414.0** 16.30	**5.0** 0.20	**494.0** 19.45	**0.0** 0.00	**30.0** 1.18	**12.0** 0.47	–	–	–	**165** 364
JM966741DW	JM966711W	TDIK-3	Type B	**2.0** 0.08	**420.0** 16.53	**4.0** 0.16	**513.0** 20.20	**3.3** 0.13	**32.0** 1.26	**11.7** 0.46	–	–	–	**159** 350

[1]See page 175 for keyway types.

Continued on next page.

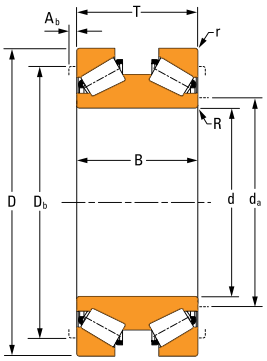

TDIK-1

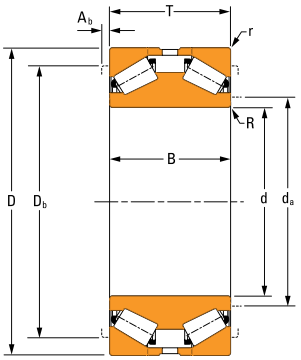

TDIK-2

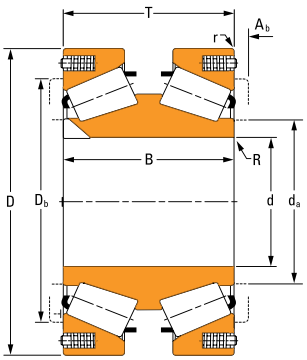

TDIK-3

TABLE 58. TDIK PRODUCT DATA *– continued*

Bearing Dimensions				Load Ratings						
				One Million Revolutions			90 Million Revolutions			Static Axial
Bore d	O.D. D	Width over Cups T	Width over Cones B	Dynamic Radial $C_{1(2)}$	e	Y	Dynamic Axial C_{a90}	Dynamic Radial $C_{90(2)}$	K Factor	C_{a0}
mm in.	**mm** in.	**mm** in.	**mm** in.	**kN** lbf			**kN** lbf	**kN** lbf		**kN** lbf
380 14.9606	**590** 23.2283	**260** 10.2362	**260** 10.2362	**4970** 1120000	0.33	1.80	**421** 94800	**1290** 290000	1.76	**5380** 1210000
390 15.3543	**567.5** 22.3425	**180** 7.0866	**180** 7.0866	**3520** 791000	0.73	0.82	**657** 148000	**913** 205000	0.80	**8180** 1840000
390 15.3543	**570** 22.4409	**180** 7.0866	**180** 7.0866	**1650** 371000	1.27	0.47	**529** 119000	**427** 96100	0.46	**6520** 1470000
390 15.3543	**600** 23.6220	**200** 7.8740	**200** 7.8740	**3530** 793000	0.87	0.68	**779** 175000	**915** 206000	0.67	**9870** 2220000
399.964 15.7466	**649.950** 25.5886	**200.761** 7.9040	**200.000** 7.8740	**3500** 786000	0.87	0.68	**772** 174000	**907** 204000	0.67	**10000** 2260000
400 15.7480	**650** 25.5906	**239.6** 9.4331	**240** 9.4488	**3830** 860000	0.91	0.65	**897** 202000	**992** 223000	0.64	**12900** 2890000
400 15.7480	**650** 25.5906	**239.6** 9.4331	**240** 9.4488	**3830** 860000	0.91	0.65	**897** 202000	**992** 223000	0.64	**12900** 2890000
400.050 15.7500	**590.550** 23.2500	**193.675** 7.6250	**193.675** 7.6250	**4020** 903000	0.32	1.85	**333** 74900	**1040** 234000	1.80	**4520** 1020000
406.400 16.0000	**546.100** 21.5000	**138.112** 5.4375	**138.112** 5.4375	**2450** 551000	0.47	1.26	**296** 66600	**636** 143000	1.23	**4290** 965000
406.400 16.0000	**762.000** 30.0000	**330.000** 12.9921	**330.000** 12.9921	**8940** 2010000	0.75	0.80	**1700** 383000	**2320** 521000	0.78	**17200** 3870000
425 16.7323	**600** 23.6220	**160** 6.2992	**160** 6.2992	**2300** 516000	1.04	0.57	**615** 138000	**595** 134000	0.56	**8000** 1800000
430 16.9291	**600** 23.6220	**200** 7.8740	**200** 7.8740	**4210** 946000	0.47	1.27	**508** 114000	**1090** 245000	1.24	**6650** 1490000
431.800 17.0000	**585.000** 23.0315	**136.525** 5.3750	**136.525** 5.3750	**2140** 481000	0.55	1.10	**298** 67000	**555** 125000	1.07	**4470** 1010000
450 17.7165	**680** 26.7717	**180** 7.0866	**180** 7.0866	**3670** 824000	0.97	0.61	**911** 205000	**951** 214000	0.60	**10700** 2400000
457.200 18.0000	**679.450** 26.7500	**238.125** 9.3750	**238.125** 9.3750	**6500** 1460000	0.33	1.80	**551** 124000	**1680** 379000	1.76	**7170** 1610000

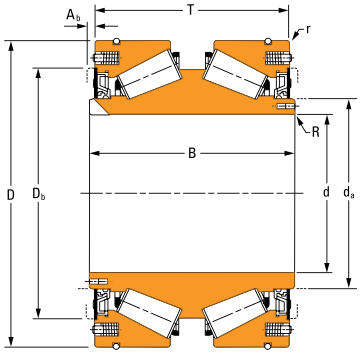

TDIKSC-1

Bearing Part No.		Design Type	Key Type[1]	Mounting Dimensions					Keyway Dimensions					Weight
Cone	Cup			Max. Shaft Radius R	Cone Backing Diameter d_a	Max. Housing Radius r	Cup Backing Diameter D_b	Cage Axial Clearance A_b	f	b	b_1	r_k	h	
				mm in.	**mm** in.	**mm** in.	**mm** in.	**mm** in.	**mm** in.	**mm** in.	**mm** in.	**mm** in.	**mm** in.	**kg** lbs.
JM268730DW	JM268711	Special[2]	Type C	**3.5** 0.14	**418.0** 16.46	**6.4** 0.25	**543.0** 21.38	**0.0** 0.00	**40.0** 1.58	**17.0** 0.67	**25.0** 0.98	–	–	**232** 511
JM966748DW	JM966711W	TDIK-3	Type B	**2.0** 0.08	**421.0** 16.57	**4.0** 0.16	**513.0** 20.20	**3.3** 0.13	**32.0** 1.26	**11.7** 0.46	–	–	–	**150** 331
JLM966849DW	JLM966810A	TDIKSC-1	Type B	**3.5** 0.14	**422.9** 16.65	**6.4** 0.25	**491.0** 19.33	**0.0** 0.00	**51.3** 2.02	**20.0** 0.79	–	–	–	**134** 296
NP303656	NP322933	TDIK-1	Type B	**5.0** 0.20	**431.0** 16.97	**4.0** 0.16	**531.0** 20.91	**0.0** 0.00	**50.0** 1.97	**10.0** 0.39	–	–	–	**207** 456
M969831DW	M969811	TDIK-1	Type D	**3.3** 0.13	**446.0** 17.56	**6.4** 0.25	**585.0** 23.03	**11.4** 0.45	–	–	–	**11.3** 0.45	–	**257** 565
JM969241DW	NP311711	TDIK-3	Type C	**6.4** 0.25	**459.0** 18.07	**6.4** 0.25	**573.0** 22.56	**0.0** 0.00	**64.3** 2.53	**19.1** 0.75	**44.5** 1.75	–	–	**310** 683
JM969242DW	JM969211	TDIK-1	Type C	**6.4** 0.25	**459.0** 18.07	**6.4** 0.25	**573.0** 22.56	**0.2** 0.01	**64.3** 2.53	**19.1** 0.75	**44.5** 1.75	–	–	**311** 685
EE833157DW	833232	TDIK-2	Type D	–	**431.0** –	**6.4** 16.97	**549.0** 0.25	**10.9** 21.61	–	–	–	**9.5** 0.38	–	**189** 416
LM767748DA	LM767710	TDIK-2	Type B	**1.5** 0.06	**427.0** 16.81	**6.4** 0.25	**510.0** 20.08	**8.1** 0.32	**50.0** 1.97	**10.0** 0.39	–	–	–	**91.0** 202
NP176734	NP628367	TDIK-3	Type C	**3.3** 0.13	**492.0** 19.37	**6.4** 0.25	**675.0** 26.57	**6.5** 0.25	**64.3** 2.53	**9.5** 0.37	**44.5** 1.75	–	–	**668** 1472
NP771735	NP968784	TDIK-1	Type A	**2.0** 0.08	**466.0** 18.35	**2.0** 0.08	**552.0** 21.73	**0.0** 0.00	**51.3** 2.02	**31.8** 1.25	–	–	–	**135** 297
NP206264	NP751334	TDIK-1	Type C	**3.0** 0.12	**460.0** 18.11	**4.0** 0.16	**555.0** 21.85	**0.0** 0.00	**50.0** 1.96	**19.0** 0.74	–	–	–	**173** 380
NP911570	NP533194	TDIK-3	Type C	**1.5** 0.06	**453.0** 17.83	**3.3** 0.13	**543.0** 21.38	**1.8** 0.07	**40.0** 1.57	**9.5** 0.38	**19.1** 0.75	–	–	**99.0** 219
NP747477	NP892981	TDIK-2	Type C	**3.0** 0.12	**498.0** 19.61	**6.4** 0.25	**618.0** 24.33	**0.0** 0.00	**51.3** 2.02	**11.0** 0.43	**40.0** 1.57	–	–	**263** 580
M272740DW	M272710	TDIK-2	Type D	**3.3** 0.13	**495.0** 19.49	**6.4** 0.25	**633.0** 24.92	**13.7** 0.54	–	–	–	**11.1** 0.44	–	**324** 714

[1]See page 175 for keyway types.
[2]Contact your Timken engineer for support on this bearing type.

Continued on next page.

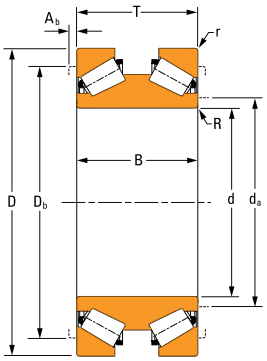

TDIK-1

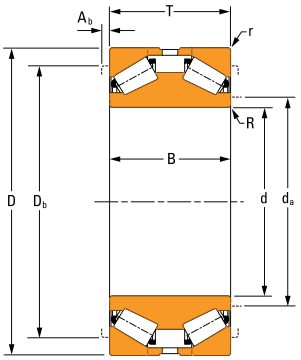

TDIK-2

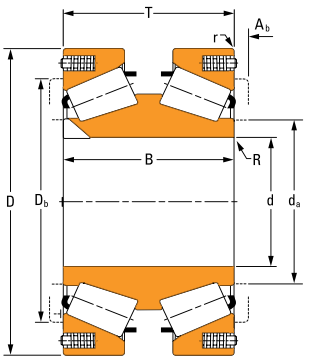

TDIK-3

TABLE 58. TDIK PRODUCT DATA *– continued*

Bearing Dimensions				Load Ratings						
				One Million Revolutions			90 Million Revolutions			Static Axial
Bore d	O.D. D	Width over Cups T	Width over Cones B	Dynamic Radial $C_{1(2)}$	e	Y	Dynamic Axial C_{a90}	Dynamic Radial $C_{90(2)}$	K Factor	C_{a0}
mm in.	**mm** in.	**mm** in.	**mm** in.	**kN** lbf			**kN** lbf	**kN** lbf		**kN** lbf
482 18.9764	**655** 25.7874	**160** 6.2992	**160** 6.2992	**3240** 728000	0.47	1.27	**390** 87800	**840** 189000	1.24	**5340** 1200000
482.600 19.0000	**733.425** 28.8750	**190.000** 7.4803	**190.000** 7.4803	**3790** 851000	0.87	0.68	**836** 188000	**982** 221000	0.67	**11800** 2660000
482.600 19.0000	**733.425** 28.8750	**199.263** 7.8450	**199.999** 7.8740	**3790** 852000	0.78	0.77	**755** 170000	**983** 221000	0.75	**9630** 2160000
509.948 20.0767	**733.425** 28.8750	**200.025** 7.8750	**200.025** 7.8750	**4320** 971000	0.87	0.68	**953** 214000	**1120** 252000	0.67	**11700** 2640000
510.083 20.0820	**799.925** 31.4931	**285.000** 11.2205	**285.000** 11.2205	**7640** 1720000	0.78	0.77	**1520** 342000	**1980** 445000	0.75	**17200** 3860000
540 21.2598	**860** 33.8583	**256** 10.0787	**256** 10.0787	**4330** 974000	0.71	0.84	**783** 176000	**1120** 253000	0.82	**11500** 2600000
560 22.0470	**770** 30.3150	**200** 7.8740	**200** 7.8740	**4360** 981000	0.94	0.63	**1040** 234000	**1130** 254000	0.62	**13600** 3060000
580 22.8346	**900** 35.4331	**348.8** 13.7323	**348.8** 13.7323	**9320** 2100000	0.83	0.71	**1980** 444000	**2420** 543000	0.70	**24600** 5520000
600 23.6220	**955** 37.5984	**330** 12.9921	**330** 12.9921	**7790** 1750000	0.94	0.63	**1860** 419000	**2020** 454000	0.62	**22100** 4980000
635.000 25.0000	**939.800** 37.0000	**304.800** 12.0000	**304.800** 12.0000	**8320** 1870000	0.85	0.70	**1790** 402000	**2160** 485000	0.69	**21700** 4880000
635.000 25.0000	**939.800** 37.0000	**304.800** 12.0000	**304.800** 12.0000	**7950** 1790000	0.58	1.03	**1170** 262000	**2060** 463000	1.01	**15900** 3580000
670 26.3780	**980** 38.5827	**230** 9.0551	**230** 9.0551	**6760** 1520000	0.69	0.86	**1210** 271000	**1750** 394000	0.84	**13700** 3080000
685.800 27.0000	**939.800** 37.0000	**228.600** 9.0000	**234.950** 9.2500	**5090** 1140000	0.87	0.68	**1120** 253000	**1320** 297000	0.67	**19900** 4460000
700 27.5591	**1000** 39.3701	**250** 9.8425	**250** 9.8425	**7480** 1680000	0.87	0.68	**1650** 371000	**1940** 436000	0.67	**20300** 4560000
800 31.4961	**1100** 43.3071	**300** 11.8110	**300** 11.8110	**8410** 1890000	0.78	0.77	**1670** 377000	**2180** 490000	0.75	**30500** 6850000
900 35.4330	**1220** 48.0315	**300** 11.8110	**300** 11.8110	**8530** 1920000	0.88	0.67	**1940** 436000	**2210** 497000	0.66	**37200** 8360000

Bearing Part No.		Design Type	Key Type[1]	Mounting Dimensions					Keyway Dimensions					Weight
Cone	Cup			Max. Shaft Radius R	Cone Backing Diameter d_a	Max. Housing Radius r	Cup Backing Diameter D_b	Cage Axial Clearance A_b	f	b	b_1	r_k	h	
				mm in.	**mm** in.	**mm** in.	**mm** in.	**mm** in.	**mm** in.	**mm** in.	**mm** in.	**mm** in.	**mm** in.	**kg** lbs.
NP950329	NP243097	TDIK-3	Type A	**3.3** 0.13	**510.0** 20.08	**3.3** 0.13	**612.0** 24.09	**1.8** 0.07	**40.0** 1.57	**20.0** 0.79	–	–	–	**153** 338
NP091790	NP091792	TDIK-1	Type C	**3.3** 0.13	**565.0** 22.24	**3.3** 0.13	**648.0** 25.51	**10.9** 0.42	**64.3** 2.53	**7.5** 0.30	**44.5** 1.75	–	–	**292** 643
LM974534DW	LM974511	TDIK-2	Type C	**3.3** 0.13	**534.0** 21.02	**17.5** 0.69	**663.0** 26.10	**0.4** 0.01	**50.8** 2.00	**20.6** 0.81	**47.6** 1.88	–	–	**274** 604
LM975342DW	LM975312	TDIK-1	Type C	**3.3** 0.13	**552.0** 21.73	**4.8** 0.19	**675.0** 26.57	**2.3** 0.09	**50.7** 2.00	**17.5** 0.69	**38.1** 1.50	–	–	**259** 572
NP430670	NP786311	TDIK-1	Type A	**6.4** 0.25	**570.0** 22.44	**6.4** 0.25	**729.0** 28.70	**0.6** 0.02	**70.3** 2.77	**44.5** 1.75	–	–	–	**515** 1136
NP452357	NP567439	TDIK-2	Type A	**7.5** 0.30	**597.0** 23.50	**7.5** 0.30	**762.0** 30.00	**10.8** 0.43	**80.0** 3.15	**48.0** 1.88	–	–	–	**589** 1298
NP517421	NP171927	TDIK-1	Type C	**3.0** 0.12	**585.0** 23.03	**6.0** 0.24	**705.0** 27.76	**6.6** 0.26	**51.3** 2.02	**15.0** 0.59	**31.8** 1.25	–	–	**265** 584
NP679508	NP234859	TDIK-3	Type C	**3.3** 0.13	**623.0** 24.52	**12.7** 0.50	**801.0** 31.54	**0.0** 0.00	**71.5** 2.82	**20.6** 0.81	**47.6** 1.88	–	–	**793** 1744
NP160922	NP160923	TDIK-3	Type C	**3.3** 0.13	**660.0** 26.22	**12.7** 0.50	**864.0** 34.02	**3.8** 0.15	**71.5** 2.82	**20.6** 0.81	**47.6** 1.88	–	–	**622** 1372
NP365351	NP365352	TDIK-1	Type A	**3.3** 0.13	**696.0** 27.40	**6.4** 0.25	**855.0** 33.66	**0.0** 0.00	**70.5** 2.78	**50.8** 2.00	–	–	–	**700** 1543
NP635386	LM881214	TDIK-1	Type A	**3.3** 0.13	**684.0** 26.93	**6.4** 0.25	**873.0** 34.37	**0.0** 0.00	**70.5** 2.78	**50.8** 2.00	–	–	–	**712** 1571
NP386878	NP032573	TDIK-1	Type C	**7.6** 0.30	**723.0** 28.46	**10.0** 0.39	**909.0** 35.79	**0.0** 0.00	**64.0** 2.51	**10.0** 0.39	**35.0** 1.37	–	–	**539** 1188
NP679610[3]	NP249962	TDIK-1	Type C	**6.4** 0.25	**744.2** 29.30	**6.4** 0.25	**864.0** 34.02	**3.2** 0.13	**63.5** 2.50	**9.5** 0.37	**38.1** 1.50	–	–	**471** 1039
NP121146	NP908442	TDIK-1	Type C	**3.0** 0.12	**756.0** 29.76	**6.0** 0.24	**921.0** 36.26	**5.3** 0.21	**64.3** 2.53	**19.1** 0.75	**44.5** 1.75	–	–	**615** 1356
NP709025	JLM985010	TDIK-2	Type C	**1.5** 0.06	**852.0** 33.54	**6.0** 0.24	**1010.0** 39.76	**4.1** 0.15	**75.9** 2.99	**22.0** 0.87	**44.5** 1.75	–	–	**899** 1981
NP419560	NP350963	TDIK-1	Type C	**4.0** 0.16	**954.0** 37.56	**6.4** 0.25	**1115.0** 43.90	**0.0** 0.00	**89.5** 3.52	**20.6** 0.81	**47.6** 1.88	–	–	**1023** 2256

[1]See page 175 for keyway types.
[3]Bearing has special tolerances. Please contact your Timken engineer.

TTDFLK, TTDW AND TTDK BEARINGS

The TTDW and TTDK type is mainly used on work roll axial positions when the axial loads are very high. The TTDFLK type is typically used on long product mills.

Fig. 55. TTDFLK bearing.

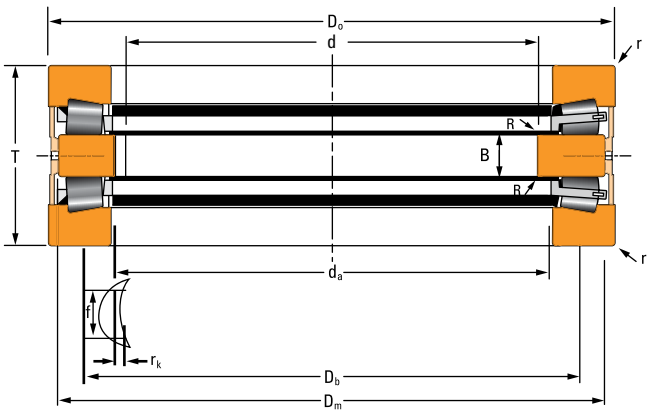

Fig. 56. TTDFLK bearing.

OVERALL DIMENSIONS:

d – Bore diameter

D_0 – Outer rings outer diameter

D_m – Inner ring outer diameter

T – Width over outer rings

B – Inner ring width

R – Shaft maximum fillet radius

r – Housing maximum radius

D_b – Housing shoulder diameter

TWO-ROW TAPERED ROLLER BEARING DESIGN TYPES TTDFLK, TTDW AND TTDK (LOOSE FIT MOUNTING)

TTDFLK-1

- One double flat race.
- Two single tapered races.
- Two cage and roller assemblies.
- One outer spacer.

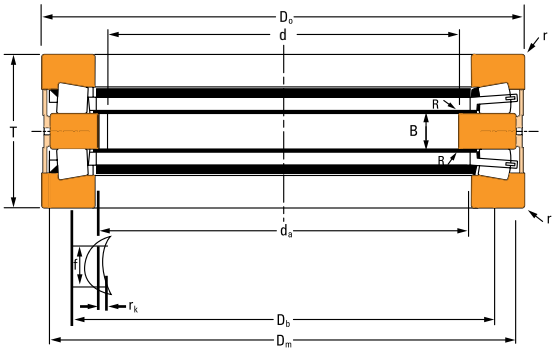

TTDFLK-1

TTDFLK-2

- Two single tapered outer races.
- One flat inner race.
- Inner-ring face keyway (optional).
- One outer-ring spacer with oil slots.

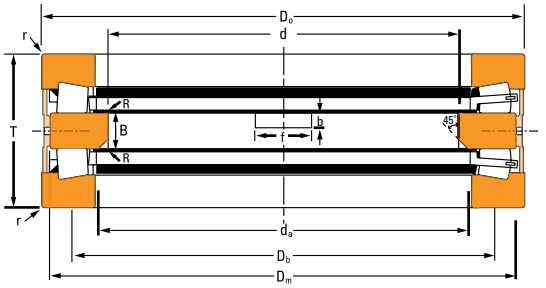

TTDFLK-2

TTDW

- Two single flat races.
- One double tapered race with extended ribs.
- Slots on double race faces.

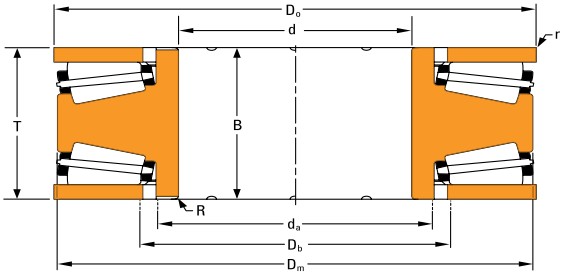

TTDW

TTDK-1

- Two single flat races.
- One double tapered race with keyway on inner-ring bore.

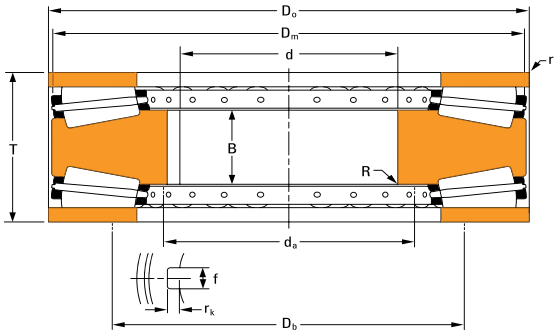

TTDK-1

TTDK-2

- One double tapered race.
- Two single flat races.
- One outer spacer.

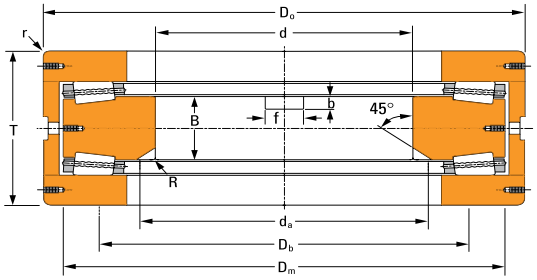

TTDK-2

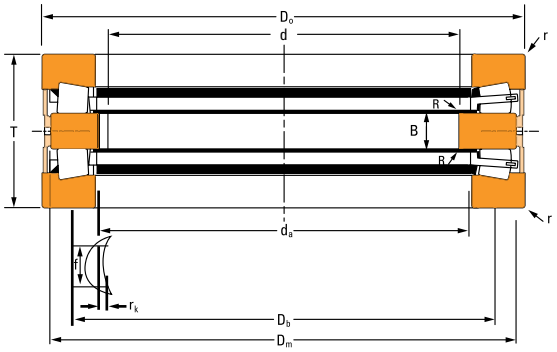

TTDFLK-1

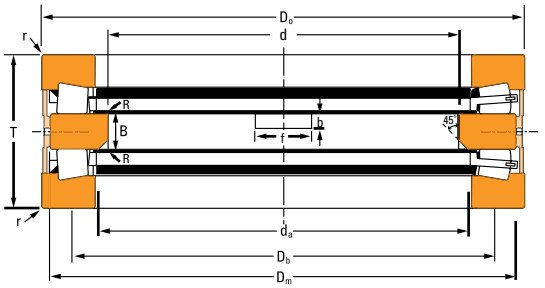

TTDFLK-2

TABLE 59. TTDFLK, TTDW AND TTDK PRODUCT DATA

Bearing Dimensions					Load Ratings			Bearing Part No.	
					One Million Revolutions	90 Million Revolutions	Static Axial Rating		
Bore d	O.D. D_0	O.D. D_m	Width over Cups T	Width over Cones B	Dynamic Axial Rating C_{a1}	Dynamic Axial C_{a90}	C_{a0}	Thrust Race Double	Thrust Race Single
mm in.	**mm** in.	**mm** in.	**mm** in.	**mm** in.	**kN** lbf	**kN** lbf	**kN** lbf		
142.000 5.5906	**293.000** 11.5354	**304.800** 12.0000	**130.000** 5.1180	**55.000** 2.1654	**1900** 426200	**500** 111000	**6510** 1460000	T660DW	T660FA
170 6.6929	**249.97** 9.8413	**246.913** 9.7210	**70** 2.7559	**19** 0.7480	**440** 97790	**120** 25400	**1820** 408000	T730DW	T730FA
170 6.6929	**240** 9.4488	**228.6** 9.0000	**84** 3.3070	**20** 0.7874	**500** 112850	**130** 29225	**1600** 359690	T6110F	T6110
180 7.0866	**279.975** 11.0226	**275** 10.8268	**90** 3.5433	**31.826** 1.2490	**720** 162470	**190** 42200	**2990** 672000	T770DW	T770FA
180 7.0866	**280** 11.0236	**263** 10.3500	**90** 3.5433	**20** 0.7874	**764** 171760	**198** 44500	**2510** 564300	H-21033-B	–
180 7.0866	**280** 11.0236	**265** 10.4330	**90** 3.5433	**20** 0.7874	**740** 167000	**190** 43160	**2410** 541790	T7020F	T7020
203.200 8.0000	**390.855** 15.3880	**403.860** 15.9000	**152.400** 6.0000	**72.898** 2.8700	**2850** 639100	**740** 166000	**11900** 2670000	T8011DW	T8011F
203.200 8.0000	**431.317** 16.9810	**403.860** 15.9000	**152.400** 6.0000	**152.400** 6.0000	**2850** 639100	**740** 166000	**11900** 2670000	T8010DW	T8010F
220 8.6614	**300** 11.8110	**289** 11.3780	**96** 3.7795	**22** 0.8661	**600** 135335	**160** 35070	**2070** 465355	T8110F	T8110
250 9.8425	**379.949** 14.9586	**375** 14.7638	**100** 3.3970	**36.576** 1.4400	**1348** 302995	**350** 78700	**6010** 1350000	T1080DW	T1080FA
250 9.8425	**380** 14.9606	**364** 14.3307	**100** 3.9370	**22** 0.8661	**1200** 269770	**310** 69915	**5030** 1130790	T9130FW	T9130
260 10.2362	**360** 14.1732	**344** 13.5433	**92** 3.6620	**20** 0.7874	**810** 182320	**210** 47210	**3110** 699160	T10400F	T10400
260.350 10.2500	**584.124** 22.9970	**533.400** 21.0000	**222.250** 8.7500	**222.250** 8.7500	**5570** 1249500	**1450** 324000	**21600** 4850000	T10250DW	T10250F
291.150 11.4626	**519.940** 20.4701	**480.000** 18.8976	**265.900** 10.4685	**118.000** 4.6457	**2510** 564270	**650** 146130	**9800** 2201300	M-21135-C	H-21120-C
320 12.5984	**470** 18.5039	**448** 17.6378	**130** 5.1181	**30** 1.1811	**1770** 397910	**460** 103190	**7670** 1724290	T12100F	T12100

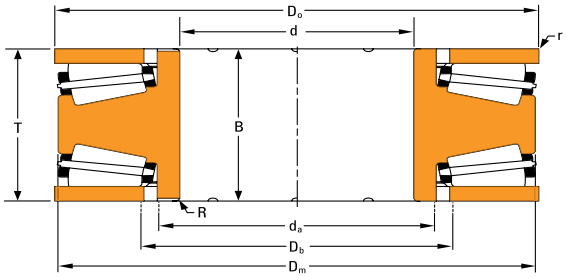

TTDW

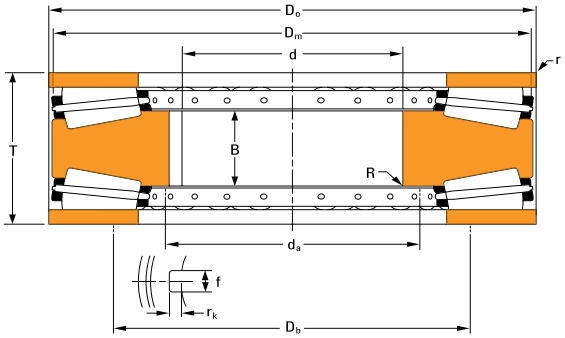

TTDK-1

Design Type	Cage Type[1]	Mounting Dimensions				Keyway Dimensions			Weight
		Max. Shaft Radius R	Inner Ring Backing Diameter d_a	Max. Housing Radius r	Outer Ring Backing Diameter D_b	f	b	r_k	
		mm in.	**mm** in.	**mm** in.	**mm** in.	**mm** in.	**mm** in.	**mm** in.	**kg** lbs.
TTDK-1	P	**1.5** 0.06	**162.0** 6.38	**3.3** 0.13	**168.0** 6.61	**30.0** 1.18	–	**9.0** 0.35	**44.0** 97.0
TTDK-1	P	**1.5** 0.06	182.9 7.20	**3.3** 0.13	**186.0** 7.32	**30.0** 1.18	–	**6.0** 0.24	**8.00** 18.0
TTDFLK-1	MB	**0.6** 0.02	**182.0** 7.17	**2.0** 0.08	**190.0** 7.48	–	–	–	**11.0** 24.0
TTDK-1	P	**1.5** 0.06	192.0 7.56	**3.3** 0.13	**196.0** 7.72	**30.0** 1.18	–	**6.0** 0.24	**18.0** 39.0
TTDFLK-1	MB	**1.0** 0.04	**185.0** 7.28	**2.0** 0.08	**254.0** 10.00	**20.0** 0.79	–	**4.0** 0.16	**21.8** 48.0
TTDFLK-1	MB	**1.0** 0.04	**192.0** 7.56	**2.0** 0.08	**205.0** 8.07	–	–	–	**20.0** 44.0
TTDK-1	P	**1.5** 0.06	**236.5** 9.31	**3.3** 0.13	**260.4** 10.25	**30.0** 1.18	–	**10.0** 0.39	**133** 294
TTDW	P	**4.8** 0.19	**235.0** 9.25	**2.0** 0.08	**260.4** 10.30	–	–	–	**158** 348
TTDFLK-1	MB	**1.5** 0.06	**231.0** 9.09	**2.0** 0.08	**245.0** 9.65	–	–	–	**19.0** 42.0
TTDK-1	P	**1.5** 0.06	**266.7** 10.50	**3.3** 0.13	**275.0** 10.83	**30.0** 1.18	–	**7.0** 0.28	**36.0** 79.0
TTDFLK-1	MB	**0.6** 0.02	**267.0** 10.51	**2.0** 0.08	**285.0** 11.22	**30.0** 1.18	–	**6.7** 0.26	**40.0** 88.0
TTDFLK-1	MB	**2.0** 0.08	**276.0** 10.87	**2.0** 0.08	**290.0** 11.42	–	–	–	**26.0** 57.0
TTDW	P	**7.1** 0.28	**304.8** 12.00	**2.0** 0.08	**355.6** 14.00	–	–	–	**132** 292
TTDFLK-2	MB	**4.0** 0.16	**340.0** 13.39	**12.7** 0.50	**493.0** 19.40	**46.0** 1.81	**23.0** 0.91	–	**279** 616
TTDFLK-1	MB	**1.1** 0.04	**340.0** 13.39	**3.0** 0.12	**360.0** 14.17	–	–	–	**75.0** 165

[1]Cage type: P – Pin, MB – Machined bronze.

Continued on next page.

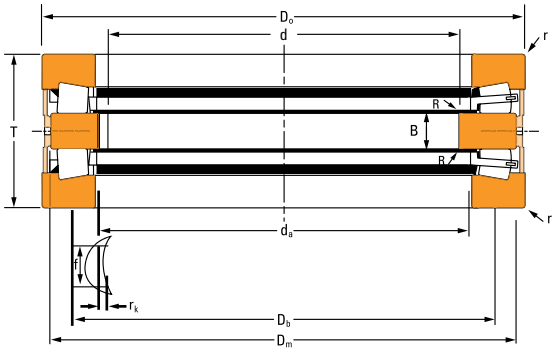

TTDFLK-1

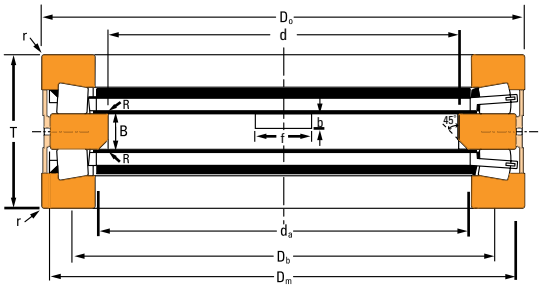

TTDFLK-2

TABLE 59. TTDFLK, TTDW AND TTDK PRODUCT DATA *– continued*

Bearing Dimensions					Load Ratings			Bearing Part No.	
					One Million Revolutions	90 Million Revolutions	Static Axial Rating		
Bore d	O.D. D_0	O.D. D_m	Width over Cups T	Width over Cones B	Dynamic Axial Rating C_{a1}	Dynamic Axial C_{a90}	C_{a0}	Thrust Race Double	Thrust Race Single
mm in.	**mm** in.	**mm** in.	**mm** in.	**mm** in.	**kN** lbf	**kN** lbf	**kN** lbf		
336.150 13.2343	**629.930** 24.8004	**576.961** 22.7150	**318.613** 12.5438	**130.000** 5.1181	**4200** 944200	**1090** 245040	**18800** 4226400	A-6881-A	A-6888-C
336.202 13.2363	**629.872** 24.7981	**579.247** 22.8050	**318.493** 12.5391	**130.000** 5.1181	**3630** 816200	**940** 212000	**15600** 3510000	T13200DW	13200F
351.150 13.8248	**669.925** 26.3750	**610.000** 24.0157	**318.900** 12.5551	**131.000** 5.1575	**4330** 973400	**1120** 251800	**18000** 4046500	M-21136-C	H-21127-C
380 14.9606	**560** 22.0472	**538.785** 21.2120	**130** 5.1181	**32** 1.2598	**2280** 512560	**590** 133100	**10200** 2293000	D-3637-A	D-3639-C
385 15.1575	**650** 25.5906	**614.5** 24.1930	**240** 9.4488	**66** 2.5984	**4850** 1090320	**1260** 283260	**18800** 4226410	T17200FW	T17200
550 21.6535	**760** 29.9213	**714.985** 28.1490	**294.5** 11.5945	**114.96** 4.5260	**3610** 812000	**940** 211000	**13900** 3120000	T24000	T24000F
550 21.6535	**760** 29.9213	**715** 28.1500	**230** 9.0551	**49.96** 1.9669	**3620** 813800	**940** 210870	**13900** 3124850	F-21063-C	F-21068-B
550 21.6535	**760** 29.9213	**736.6** 29.0000	**230** 9.0551	**50.013** 1.9690	**4020** 903700	**1040** 233800	**16600** 3731800	D-3327-G	D-3333-C

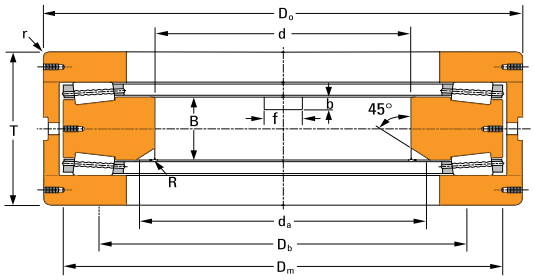

TTDK-2

Design Type	Cage Type[1]	Mounting Dimensions				Keyway Dimensions			Weight
		Max. Shaft Radius R	Inner Ring Backing Diameter d_a	Max. Housing Radius r	Outer Ring Backing Diameter D_b	f	b	r_k	
		mm in.	**mm** in.	**mm** in.	**mm** in.	**mm** in.	**mm** in.	**mm** in.	**kg** lbs.
TTDFLK-2	MB	**4.0** 0.16	**405.0** 15.94	**13.0** 0.51	**588.5** 23.17	**50.0** 1.97	**25.0** 0.98	–	**513** 1130
TTDK-2	P	**4.1** 0.16	**401.3** 15.80	**13.0** 0.51	**412.0** 16.22	**50.0** 1.97	**25.0** 0.98	–	**107** 236
TTDFLK-2	MB	**3.0** 0.12	**420.0** 16.53	**12.7** 0.50	**622.3** 24.50	**55.0** 2.17	**30.0** 1.18	–	**588** 1295
TTDFLK-1	MB	**2.8** 0.11	**420.0** 16.54	**3.0** 0.12	**519.1** 20.44	**45.0** 1.77	–	**10.0** 0.39	**96.0** 211
TTDFLK-1	MB	**3.0** 0.12	**408.9** 16.10	**10.2** 0.40	**456.2** 17.96	**45.5** 1.79	–	**25.4** 1.00	**282** 621
TTDFLK-1	MB	**3.0** 0.12	**580.0** 22.83	**6.0** 0.24	**704.5** 27.74	**45.1** 1.78	–	**9.9** 0.39	**373** 823
TTDFLK-1	MB	**3.0** 0.12	**575.0** 22.64	**6.0** 0.24	**705.0** 27.75	**45.1** 1.78	–	**9.9** 0.39	**310** 683
TTDFLK-2	MB	**3.0** 0.12	**609.6** 24.00	**6.4** 0.25	**717.6** 28.25	**50.8** 2.00	**19.0** 0.75	–	(2)

[1]Cage type: P – Pin, MB – Machined bronze.
[2]Contact your Timken engineer.

SOLUTIONS FOR SCREWDOWN SYSTEMS

Please refer to Timken® Tapered Roller Bearing Catalog (order no. 10481) for more information.

Fig. 57. TTHDSX bearing.

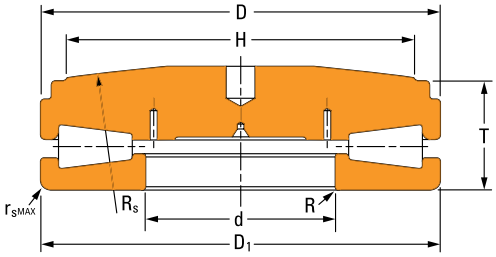

Fig. 58. TTHDSX bearing.

OVERALL DIMENSIONS:

d – Bore diameter

D – Top race outer diameter

D_1 – Bottom race outer diameter

T – Bearing width

SCREWDOWN BEARING DESIGN TYPES

TTHDFLSX-1

- One lower flat race.
- One upper tapered race with a special convex profile.

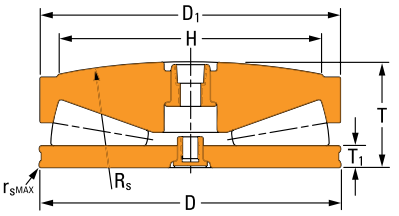

TTHDFLSX-1

TTHDFLSX-2

- One lower flat race.
- One upper tapered race with a special convex profile.
- Cage.

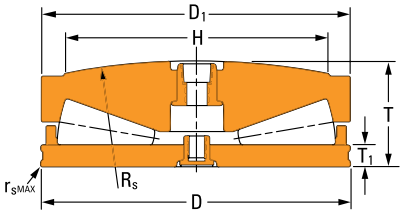

TTHDFLSX-2

TTHDFLSX-3

- Three-ring design.
- One lower flat race.
- One upper tapered race with a special convex profile.
- One top aligning plate.

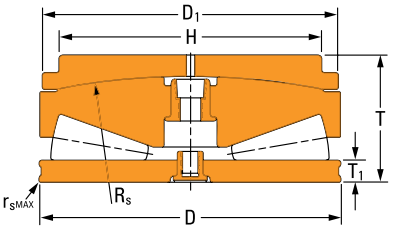

TTHDFLSX-3

TTHDSX-1

- One lower tapered race with axial bore.
- One upper tapered race with a special convex profile.

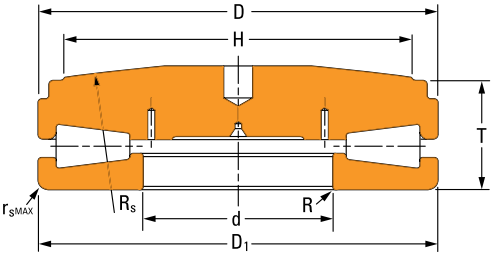

TTHDSX-1

TTHDSX-2

- One lower tapered race with axial bore and recess diameter.
- One upper tapered race with a special convex profile.

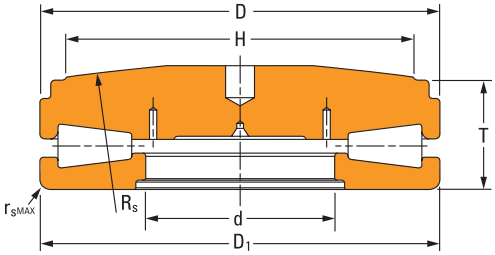

TTHDSX-2

TTHDFLSV-1

- One lower flat race.
- One upper tapered race with a special concave profile.

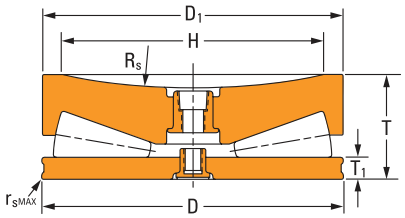

TTHDFLSV-1

TTHDFLSV-2

- Three-ring design.
- One upper tapered race.
- One lower flat race with a special concave profile.
- One bottom aligning plate with a matching convex profile.

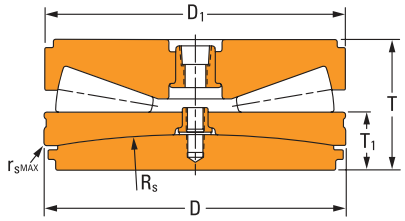

TTHDFLSV-2

TTHDSV-1

- One lower tapered race with axial bore.
- One upper tapered race with a special concave profile.

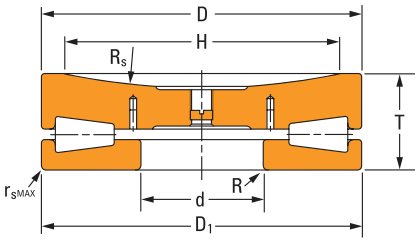

TTHDSV-1

TTHDSV-2

- One lower tapered race with axial bore and recess diameter.
- One upper tapered race with a special concave profile.

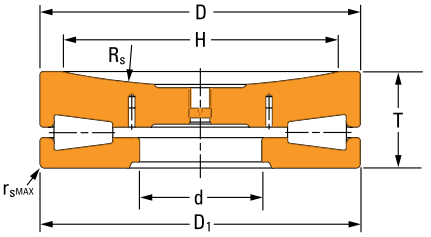

TTHDSV-2

TTHDDV

- One lower flat race.
- One upper tapered race.

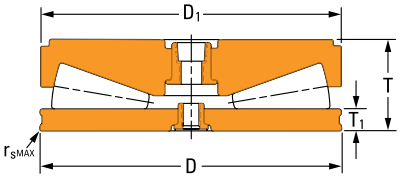

TTHDDV

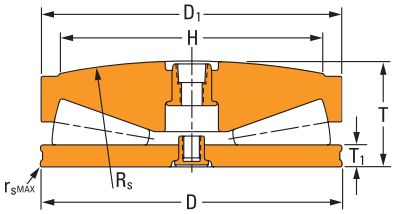

TTHDFLSX-1

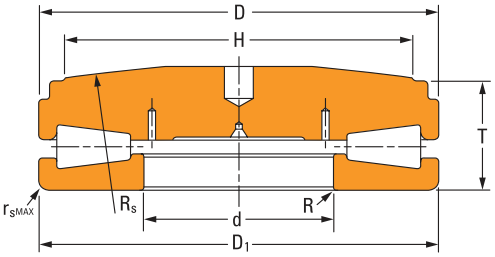

TTHDSX-1

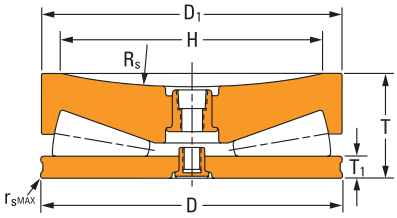

TTHDFLSV-1

TABLE 60. TTHD – TTHDSX – TTHDSV PRODUCT DATA

Bearing Part No.	Design Type	Bearing Dimensions						Static Axial Rating	Mounting Dimensions			Bearing Weight	Tolerance Table
		Large O.D. D	Small O.D. D_1	Bearing Width T	Flat Race Width T_1	Bore d	Screw Extension Diameter H	C_{a0}	Spherical Radius R_s	$r_{s\,max}$	R		
		mm in.	**mm** in.	**mm** in.	**mm** in.	**mm** in.	**mm** in.	**kN** lbf	**mm** in.	**mm** in.	**mm** in.	**kg** lbs.	
B-7461-B	TTHDFLSX-1	**123.825** 4.8750	**120.650** 4.7500	**43.332** 1.7060	**38.100** 1.5000	–	**101.600** 4.0000	**1500** 337000	**457.2** 18.00	**1.5** 0.06	–	(1)	24, 25
58TTSV908	TTHDFLSV-1	**149.225** 5.8750	**146.863** 5.7820	**47.625** 1.8750	**12.700** 0.5000	–	**127.000** 5.0000	**2520** 566000	**228.6** 9.00	**1.5** 0.06	–	(1)	24, 25
T311FS-T311S	TTHDSX-1	**161.925** 6.3750	**161.925** 6.3750	**49.213** 1.9375	–	**76.200** 3.0000	**127.000** 5.0000	**2330** 524000	**457.2** 18.00	**3.3** 0.13	**3.3** 0.13	**6.60** 14.5	23, 24, 25
68TTSV910	TTHDFLSV-1	**174.625** 6.8750	**172.263** 6.7820	**52.375** 2.0620	**12.700** 0.5000	–	**152.400** 6.0000	**3180** 716000	**228.6** 9.00	**1.6** 0.06	–	(1)	24, 25
68TTSX910	TTHDFLSX-1	**174.625** 6.8750	**172.263** 6.7820	**61.392** 2.4170	**12.700** 0.5000	–	**152.400** 6.0000	**3180** 716000	**457.2** 18.00	**1.5** 0.06	–	(1)	24, 25
80TTSX914	TTHDFLSX-1	**203.200** 8.0000	**200.838** 7.9070	**75.616** 2.9770	**15.875** 0.6250	–	**177.800** 7.0000	**4630** 1040000	**508.0** 20.00	**1.6** 0.06	–	**17.7** 38.9	24, 25
80TTSX914OA076	TTHDFLSX-1	**203.200** 8.0000	**200.838** 7.9070	**95.250** 3.7500	**15.875** 0.6250	–	**177.800** 7.0000	**4630** 1040000	**508.0** 20.00	**1.5** 0.06	–	(1)	24, 25
T411FAS-T411S	TTHDSX-1	**215.900** 8.5000	**215.900** 8.5000	**65.088** 2.5625	–	**76.200** 3.0000	**171.450** 6.7500	**4020** 904000	**508.0** 20.00	**3.3** 0.13	**3.3** 0.13	**8.90** 19.6	23, 24, 25
105TTSV918	TTHDFLSV-1	**266.700** 10.5000	**264.338** 10.4070	**80.963** 3.1875	**19.050** 0.7500	–	**228.600** 9.0000	**8230** 1850000	**304.8** 12.00	**1.5** 0.06	–	**32.6** 71.8	Spec.
105TTSV918OC1150	TTHDFLSV-1	**266.700** 10.5000	**264.338** 10.4070	**80.950** 3.1870	**19.050** 0.7500	–	**228.600** 9.0000	**8230** 1850000	**355.6** 14.00	**1.5** 0.06	–	**30.0** 66.0	24, 25
105TTSX918BO035	TTHDFLSX-1	**266.700** 10.5000	**264.338** 10.4070	**94.412** 3.7170	**19.050** 0.7500	–	**228.600** 9.0000	**8230** 1850000	**609.6** 24.00	**1.5** 0.06	–	**38.0** 83.8	24, 25
T511FSA-T511S	TTHDSX-1	**266.700** 10.5000	**266.700** 10.5000	**79.375** 3.1250	–	**101.600** 4.0000	**215.900** 8.5000	**6050** 1360000	**609.6** 24.00	**4.8** 0.19	**4.8** 0.19	**17.8** 39.2	23, 24, 25
T511FS-T511SB	TTHDSX-1	**266.700** 10.5000	**266.700** 10.5000	**79.375** 3.1250	–	**112.700** 4.4370	**215.900** 8.5000	**6050** 1360000	**609.6** 24.00	**4.8** 0.19	**4.8** 0.19	**17.8** 39.2	23, 24, 25
T611FSA-T611SA	TTHDSX-1	**317.500** 12.5000	**317.500** 12.5000	**87.313** 3.4375	–	–	**228.600** 9.0000	**8810** 1980000	**762.0** 30.00	**6.4** 0.25	–	**29.3** 64.6	23, 24, 25

(1) Contact your Timken engineer.
NOTE: Bearing part numbers arranged by outer diameter.

Continued on next page.

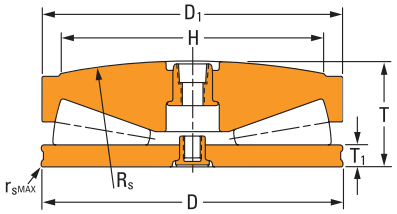

TTHDFLSX-1

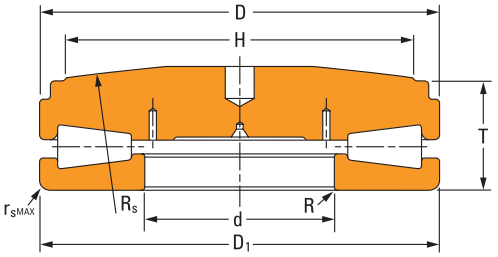

TTHDSX-1

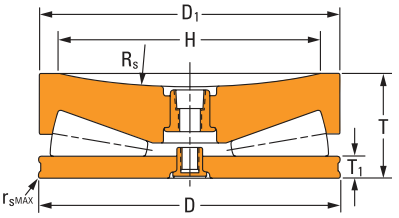

TTHDFLSV-1

TABLE 60. TTHD – TTHDSX – TTHDSV PRODUCT DATA *– continued*

Bearing Part No.	Design Type	Bearing Dimensions						Static Axial Rating	Mounting Dimensions			Bearing Weight	Tolerance Table
		Large O.D. D	Small O.D. D_1	Bearing Width T	Flat Race Width T_1	Bore d	Screw Extension Diameter H	C_{a0}	Spherical Radius R_s	$r_{s\,max}$	R		
		mm in.	**mm** in.	**mm** in.	**mm** in.	**mm** in.	**mm** in.	**kN** lbf	**mm** in.	**mm** in.	**mm** in.	**kg** lbs.	
T611FS-T611SA	TTHDSX-1	**317.500** 12.5000	**317.500** 12.5000	**87.313** 3.4375	–	**152.400** 6.0000	**228.600** 9.0000	**8810** 1980000	**762.0** 30.00	**6.4** 0.25	**6.4** 0.25	**29.3** 64.6	23, 24, 25
126TTSV922	TTHDFLSV-1	**320.675** 12.6250	**318.313** 12.5320	**95.250** 3.7500	**22.225** 0.8750	–	**279.400** 11.0000	**12540** 2820000	**381.0** 15.00	**1.6** 0.06	–	**55.4** 122	24, 25
126TTSV922OD617	TTHDFLSV-1	**320.675** 12.6250	**318.313** 12.5320	**127.000** 5.0000	**22.225** 0.8750	–	**228.600** 9.0000	**12540** 2820000	**533.4** 21.00	**1.5** 0.06	–	**55.4** 122	24, 25
126TTSX922CO740	TTHDFLSX-1	**320.675** 12.6250	**318.313** 12.5320	**110.973** 4.3690	**22.225** 0.8750	–	**279.400** 11.0000	**12540** 2820000	**762.0** 30.00	**1.5** 0.06	–	**64.6** 142	24, 25
126TTSX922OC076	TTHDFLSX-1	**320.675** 12.6250	**318.313** 12.5320	**126.187** 4.9680	**22.225** 0.8750	–	**279.400** 11.0000	**12540** 2820000	**762.0** 30.00	**1.5** 0.06	–	**64.6** 142	24, 25
126TTSX922EO1984	TTHDFLSX-1	**329.938** 12.9897	**318.313** 12.5320	**110.973** 4.3690	**22.225** 0.8750	–	**279.400** 11.0000	**12540** 2820000	**762.0** 30.00	**1.8** 0.07	–	**64.0** 140	Spec.
T711FSS-T711SA	TTHDSV-1[2]	**368.300** 14.5000	**368.300** 14.5000	**104.775** 4.1250	–	–	**292.100** 11.5000	**11880** 2670000	**622.3** 24.50	**7.9** 0.31	–	**81.7** 180	23, 24, 25
T711FS-T711SA	TTHDSX-1	**368.300** 14.5000	**368.300** 14.5000	**101.600** 4.0000	–	**177.800** 7.0000	**298.450** 11.7500	**11880** 2670000	**762.0** 30.00	**7.9** 0.31	**7.9** 0.31	**48.4** 107	23, 24, 25
148TTSF926OO487	TTHDDV[2]	**377.825** 14.8750	**375.463** 14.7820	**129.007** 5.0790	**25.400** 1.0000	–	–	**17440** 3920000	–	**1.5** 0.06	–	**110** 243	24, 25
148TTSV926AO529	TTHDFLSV-1	**377.825** 14.8750	**375.463** 14.7820	**111.125** 4.3750	**25.400** 1.0000	–	**330.200** 13.0000	**17440** 3920000	**457.2** 18.00	**1.5** 0.06	–	(1)	24, 25
148TTSX926	TTHDFLSX-1	**377.825** 14.8750	**451.663** 17.7820	**129.007** 5.0790	**25.400** 1.0000	–	**330.200** 13.0000	**17440** 3920000	**914.4** 36.00	**1.6** 0.06	–	**104** 230	24, 25
148TTSX926BO024	TTHDFLSX-1	**377.825** 14.8750	**375.463** 14.7820	**141.707** 5.5790	**38.100** 1.5000	–	**330.200** 13.0000	**17440** 3920000	**914.4** 36.00	**1.5** 0.06	–	**104** 230	24, 25
148TTSX926OB452	TTHDFLSX-1	**377.825** 14.8750	**375.463** 14.7820	**129.007** 5.0790	**25.400** 1.0000	–	**330.200** 13.0000	**17440** 3920000	**711.2** 28.00	**1.5** 0.06	–	**104** 230	24, 25
148TTSX926OD806	TTHDFLSX-1	**377.825** 14.8750	**374.650** 14.7500	**129.007** 5.0790	**25.400** 1.0000	–	**330.200** 13.0000	**17440** 3920000	**1384.3** 54.50	**1.5** 0.06	–	**104** 230	24, 25

[1]Contact your Timken engineer.
[2]See pages 196–198 for Design Type.
NOTE: Bearing part numbers arranged by outer diameter.

Continued on next page.

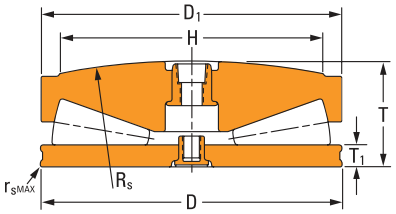

TTHDFLSX-1

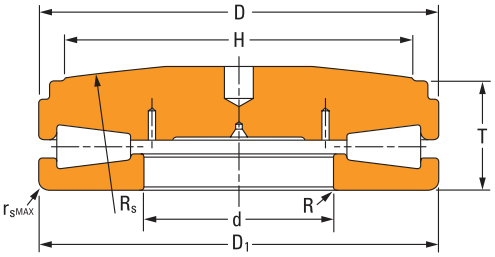

TTHDSX-1

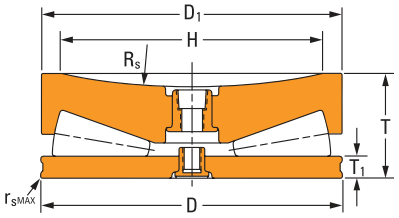

TTHDFLSV-1

Continued from previous page.

Bearing Part No.	Design Type	Bearing Dimensions: Large O.D. D	Small O.D. D_1	Bearing Width T	Flat Race Width T_1	Bore d	Screw Extension Diameter H	Static Axial Rating C_{a0}	Mounting Dimensions: Spherical Radius R_s	$r_{s\,max}$	R	Bearing Weight	Tolerance Table
		mm in.	**mm** in.	**mm** in.	**mm** in.	**mm** in.	**mm** in.	**kN** lbf	**mm** in.	**mm** in.	**mm** in.	**kg** lbs.	
161TTSV930OA534	TTHDFLSV-1	**409.575** 16.1250	**407.213** 16.0320	**139.700** 5.5000	**28.575** 1.1250	–	**330.200** 13.0000	**20420** 4590000	**508.0** 20.00	**3.0** 0.12	–	(1)	24, 25
161TTSX930	TTHDFLSX-1	**409.575** 16.1250	**407.213** 16.0320	**140.767** 5.5420	**28.575** 1.1250	–	**355.600** 14.0000	**20420** 4590000	**1016.0** 40.00	**3.2** 0.13	–	**135** 297	24, 25
161TTSX930DO035	TTHDFLSX-1	**409.575** 16.1250	**407.213** 16.0320	**140.767** 5.5420	**28.575** 1.1250	–	**355.600** 14.0000	**20420** 4590000	**1016.0** 40.00	**3.0** 0.12	–	**135** 297	24, 25
T811FSA-T811SB	TTHDSV-1[2]	**422.275** 16.6250	**419.100** 16.5000	**120.650** 4.7500	–	–	**342.900** 13.5000	**15080** 3390000	**508.0** 20.00	**9.7** 0.38	–	**104** 229	23, 24, 25
T811FS-T811SA	TTHDSX-1	**422.275** 16.6250	**419.100** 16.5000	**115.888** 4.5625	–	**203.200** 8.0000	**342.900** 13.5000	**15080** 3390000	**838.2** 33.00	**9.7** 0.38	**9.7** 0.38	**106** 234	23, 24, 25
172TTSF934	TTHDDV[2]	**438.150** 17.2500	**435.788** 17.1570	**130.175** 5.1250	**31.750** 1.2500	–	–	**23840** 5360000	–	**3.0** 0.12	–	(1)	24, 25
172TTSV934BA528	TTHDFLSV-1	**438.150** 17.2500	**435.788** 17.1570	**149.225** 5.8750	**50.800** 2.0000	–	**381** 15.0000	**23840** 5360000	**1270.0** 50.00	–	–	(1)	24, 25
172TTSX934	TTHDFLSX-1	**438.150** 17.2500	**435.788** 17.1570	**150.673** 5.9320	**130.175** 5.1250	–	**381** 15.0000	**23840** 5360000	**1016.0** 40.00	**3.0** 0.12	–	**164** 361	24, 25
D-2271-C	TTHDDV[2]	**438.150** 17.2500	**438.150** 17.2500	**130.175** 5.1250	**31.750** 1.2500	–	–	**23840** 5360000	–	**3.2** 0.13	–	**141** 312	24, 25
S-3229-B	TTHDFLSV-1	**457.200** 18.0000	**448.462** 17.6560	**161.925** 6.3750	**31.750** 1.2500	–	**336.550** 13.2500	**26290** 5910000	**508.0** 20.00	**3.0** 0.12	–	(1)	24, 25
190TTSX940OA617	TTHDFLSX-1	**482.600** 19.0000	**480.187** 18.9050	**152.781** 6.0150	**38.100** 1.5000	–	**419.100** 16.5000	**29220** 6570000	**1066.8** 42.00	**1.5** 0.06	–	**171** 376	24, 25
B-6096-C	TTHDFLSV-1	**482.600** 19.0000	**482.600** 19.0000	**146.050** 5.7500	**38.291** 1.5075	–	**431.800** 17.0000	**27930** 6280000	**1270.0** 50.00	–	–	**171** 377	Spec.
B-6593-C	TTHDFLSV-1	**482.600** 19.0000	**482.600** 19.0000	**152.400** 6.0000	**44.641** 1.7575	–	**431.800** 17.0000	**6310** 28070000	**1270.0** 50.00	–	–	**132** 290	Spec.
T9030FSA-T9030SA	TTHDSX-2[2]	**482.600** 19.0000	**482.600** 19.0000	**131.763** 5.1875	–	**168.275** 6.6250	**419.100** 16.5000	**20640** 4640000	**1295.4** 51.00	**11.2** 0.44	–	**170** 375	23, 24, 25

[1]Contact your Timken engineer.
[2]See pages 196–198 for Design Type.
NOTE: Bearing part numbers arranged by outer diameter.

Continued on next page.

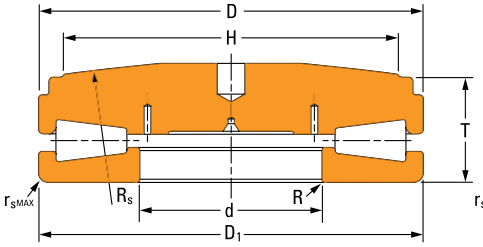

TTHDSX-1

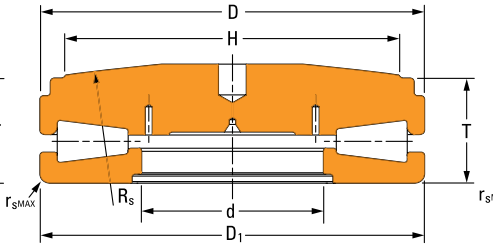

TTHDSX-2

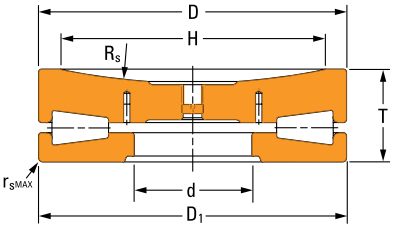

TTHDSV-2

TABLE 60. TTHD – TTHDSX – TTHDSV PRODUCT DATA *– continued*

Bearing Part No.	Design Type	Bearing Dimensions						Static Axial Rating	Mounting Dimensions			Bearing Weight	Tolerance Table
		Large O.D. D	Small O.D. D_1	Bearing Width T	Flat Race Width T_1	Bore d	Screw Extension Diameter H	C_{a0}	Spherical Radius R_s	$r_{s\,max}$	R		
		mm in.	**mm** in.	**mm** in.	**mm** in.	**mm** in.	**mm** in.	**kN** lbf	**mm** in.	**mm** in.	**mm** in.	**kg** lbs.	
T9030FSA-T9030SB	TTHDSX-2	**482.600** 19.0000	**482.600** 19.0000	**131.763** 5.1875	–	**168.275** 6.6250	**419.100** 16.5000	**20640** 4640000	**1066.8** 42.00	**11.2** 0.44	–	**170** 375	23, 24, 25
T9030FS-T9030SA	TTHDSX-1	**482.600** 19.0000	**482.600** 19.0000	**150.622** 5.9300	–	–	**419.100** 16.5000	**20640** 4640000	**1295.4** 51.00	**11.2** 0.44	–	**205** 451	23, 24, 25
T911FS-T911S	TTHDSV-2	**482.600** 19.0000	**482.600** 19.0000	**146.050** 5.7500	–	**228.600** 9.0000	**428.625** 16.8750	**20280** 4560000	**608.3** 23.95	**11.2** 0.44	–	**150** 330	23, 24, 25
T9030FSB-T9030SC	TTHDSX-1	**492.811** 19.4020	**495.249** 19.4980	**145.288** 5.7200	–	–	**431.800** 17.0000	**20640** 4640000	**1066.8** 42.00	**3.0** 0.12	–	(1)	23, 24, 25
195TTSF938	TTHDDV(2)	**495.300** 19.5000	**492.938** 19.4070	**145.288** 5.7200	**34.925** 1.3750	–	–	**29540** 6640000	–	**3.0** 0.12	–	**184** 407	24, 25
195TTSV938OA452	TTHDFLSV-1(2)	**495.300** 19.5000	**492.938** 19.4070	**146.050** 5.7500	**34.925** 1.3750	–	**431.800** 17.0000	**29540** 6640000	**635.0** 25.00	**3.2** 0.13	–	**163** 359	24, 25
195TTSV938OC902	TTHDFLSV-1(2)	**495.300** 19.5000	**488.950** 19.2500	**146.050** 5.7500	**34.925** 1.3750	–	**431.800** 17.0000	**29540** 6640000	**635.0** 25.00	**3.0** 0.12	–	**163** 359	24, 25
195TTSX938	TTHDFLSX-1(2)	**495.300** 19.5000	**492.938** 19.4070	**170.612** 6.7170	**34.925** 1.3750	–	**431.800** 17.0000	**29540** 6640000	**1066.8** 42.00	**3.0** 0.12	–	**205** 453	24, 25
195TTSX938GO1185	TTHDFLSX-1(2)	**495.300** 19.5000	**492.938** 19.4070	**170.612** 6.7170	**34.925** 1.3750	–	**431.800** 17.0000	**29540** 6640000	**1066.8** 42.00	**3.0** 0.12	–	**204** 451	24, 25
195TTSX938OG547	TTHDFLSX-1(2)	**495.300** 19.5000	**495.300** 19.5000	**170.612** 6.7170	**34.925** 1.3750	–	**431.800** 17.0000	**29540** 6640000	**1066.8** 42.00	**3.0** 0.12	–	**204** 451	Spec.
195TTSX938OM1907	TTHDFLSX-1(2)	**495.300** 19.5000	**492.938** 19.4070	**170.612** 6.7170	**34.925** 1.3750	–	**431.800** 17.0000	**29540** 6640000	**1066.8** 42.00	**3.0** 0.12	–	**204** 451	24, 25
202TTSX942FE1199	TTHDFLSX-1(2)	**514.350** 20.2500	**521.513** 20.5320	**188.722** 7.4300	**34.925** 1.3750	–	**403.225** 15.8750	**35630** 8010000	**635.0** 25.00	**1.5** 0.06	–	**239** 526	24, 25
206TTSV942	TTHDFLSV-1(2)	**523.875** 20.6250	**521.513** 20.5320	**152.400** 6.0000	**34.925** 1.3750	–	**457.200** 18.0000	**35630** 8010000	**635.0** 25.00	**3.0** 0.12	–	**191** 421	24, 25
206TTSX942	TTHDFLSX-1(2)	**523.875** 20.6250	**521.513** 20.5320	**175.768** 6.9200	**34.925** 1.3750	–	**457.200** 18.0000	**35630** 8010000	**1270.0** 50.00	**3.0** 0.12	–	**258** 568	24, 25

(1)Contact your Timken engineer.
(2)See pages 196–198 for Design Type.
NOTE: Bearing part numbers arranged by outer diameter.

Continued on next page.

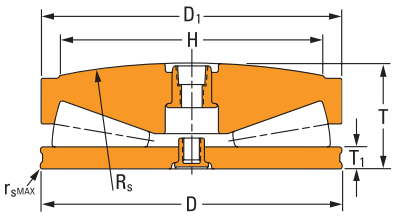

TTHDFLSX-1

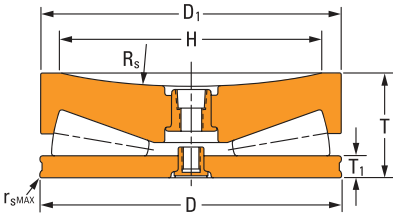

TTHDFLSV-1

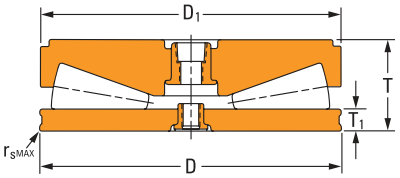

TTHDDV

Continued from previous page.

Bearing Part No.	Design Type	Bearing Dimensions						Static Axial Rating	Mounting Dimensions			Bearing Weight	Tolerance Table
		Large O.D. D	Small O.D. D_1	Bearing Width T	Flat Race Width T_1	Bore d	Screw Extension Diameter H	C_{a0}	Spherical Radius R_s	$r_{s\,max}$	R		
		mm in.	**mm** in.	**mm** in.	**mm** in.	**mm** in.	**mm** in.	**kN** lbf	**mm** in.	**mm** in.	**mm** in.	**kg** lbs.	
206TTSX942BO529	TTHDFLSX-1	**523.875** 20.6250	**521.513** 20.5320	**175.768** 6.9200	**34.925** 1.3750	–	**457.200** 18.0000	**35630** 8010000	**1270.0** 50.00	**3.2** 0.13	–	**258** 568	24, 25
210TTSV944CA1481	TTHDFLSV-1	**533.400** 21.0000	**533.400** 21.0000	**177.800** 7.0000	**31.750** 1.2500	–	**457.200** 18.0000	**36650** 8240000	**1270.0** 50.00	**1.5** 0.06	–	**257** 567	Spec.
210TTSV944DA1708	TTHDFLSV-1	**533.400** 21.0000	**533.400** 21.0000	**190.500** 7.5000	**44.450** 1.7500	–	**457.200** 18.0000	**36650** 8240000	**1270.0** 50.00	–	–	**280** 616	Spec.
210TTSX 944AO574	TTHDFLSX-1	**533.400** 21.0000	**531.012** 20.9060	**177.800** 7.0000	**31.750** 1.2500	–	**457.200** 18.0000	**36650** 8240000	**1981.2** 78.00	–	–	**249** 549	24, 25
210TTSX944BA1479	TTHDFLSX-1	**533.400** 21.0000	**533.400** 21.0000	**177.800** 7.0000	**31.750** 1.2500	–	**457.200** 18.0000	**36650** 8240000	**1981.2** 78.00	–	–	**271** 598	24, 25
B-6435-C	TTHDFLSV-1	**533.400** 21.0000	–	**190.500** 7.5000	**50.991** 2.0075	–	–	**37630** 8460000	**1270.0** 50.00	–	–	(1)	Spec.
D-2272-C	TTHDFLSX-1	**533.400** 21.0000	**533.400** 21.0000	**190.500** 7.5000	**31.750** 1.2500	–	**469.392** 18.4800	**39190** 8810000	**1220.8** 48.06	**2.5** 0.10	–	**224** 494	Spec.
A-6639-A	TTHDFLSX-1	**533.451** 21.0020	**533.400** 21.0000	**190.500** 7.5000	**31.750** 1.2500	–	**469.392** 18.4800	**39190** 8810000	**1235.5** 48.64	**2.5** 0.10	–	**287** 673	Spec.
210TTSF944	TTHDDV	**535.991** 21.1020	**535.991** 21.1020	**189.992** 7.4800	**31.750** 1.2500	–	–	**36650** 8240000	–	**2.0** 0.08	–	**274** 604	Spec.
212TTSV942EB1876	TTHDFLSV-1	**539.750** 21.2500	**539.750** 21.2500	**196.850** 7.7500	**41.275** 1.6250	–	**406.400** 16.0000	**35630** 8010000	**635.0** 25.00	**11.2** 0.44	–	**288** 635	Spec.
T1011FS-T1011S	TTHDSX-2[2]	**539.750** 21.2500	**539.750** 21.2500	**149.225** 5.8750	–	**254.000** 10.0000	**447.751** 17.6280	**25670** 5770000	**1066.8** 42.00	**11.2** 0.44	–	**226** 498	23, 24, 25
T9250FS-T9250S	TTHDSV-2[2]	**546.100** 21.5000	**546.100** 21.5000	**168.275** 6.6250	–	**234.950** 9.2500	**457.200** 18.0000	**29980** 6740000	**641.4** 25.25	**16.0** 0.63	–	**222** 490	23, 24, 25
T9250FAS-T9250SA	TTHDSX-2[2]	**549.275** 21.6250	**546.100** 21.5000	**155.575** 6.1250	–	**139.700** 5.5000	**457.200** 18.0000	**29980** 6740000	**1295.4** 51.00	**16.0** 0.63	–	**266** 586	23, 24, 25
M-4153-C	TTHDFLSV-1	**551.688** 21.7200	**539.750** 21.2500	**158.369** 6.2350	**25.400** 1.0000	–	**406.400** 16.0000	**35900** 8070000	**635.0** 25.00	**3.0** 0.12	–	**295** 650	24, 25

[1]Contact your Timken engineer.
[2]See pages 196–198 for Design Type.
NOTE: Bearing part numbers arranged by outer diameter.

Continued on next page.

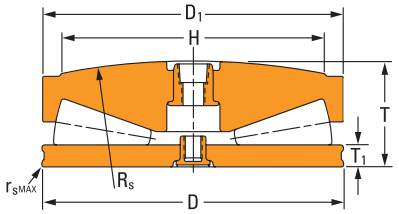

TTHDFLSX-1

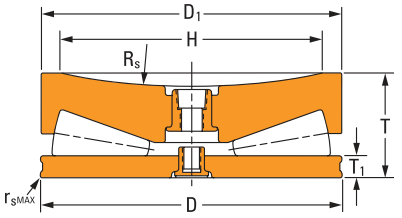

TTHDFLSV-1

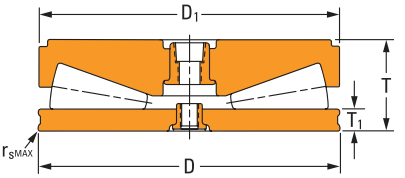

TTHDDV

TABLE 60. TTHD – TTHDSX – TTHDSV PRODUCT DATA *– continued*

Bearing Part No.	Design Type	Bearing Dimensions: Large O.D. D	Small O.D. D_1	Bearing Width T	Flat Race Width T_1	Bore d	Screw Extension Diameter H	Static Axial Rating C_{a0}	Mounting Dimensions: Spherical Radius R_s	$r_{s\,max}$	R	Bearing Weight	Tolerance Table
		mm in.	**mm** in.	**mm** in.	**mm** in.	**mm** in.	**mm** in.	**kN** lbf	**mm** in.	**mm** in.	**mm** in.	**kg** lbs.	
218TTSV946	TTHDFLSV-1	**555.625** 21.8750	**553.263** 21.7820	**165.100** 6.5000	**38.100** 1.5000	–	**482.600** 19.0000	**38340** 8620000	**635.0** 25.00	**3.2** 0.13	–	**288** 636	24, 25
218TTSX946	TTHDFLSX-1	**555.625** 21.8750	**553.263** 21.7820	**190.856** 7.5140	**38.100** 1.5000	–	**482.600** 19.0000	**38340** 8620000	**1270.0** 50.00	**3.0** 0.12	–	**284** 627	24, 25
B-6903-C	TTHDFLSX-1	**555.625** 21.8750	**553.263** 21.7820	**227.787** 8.9680	**63.500** 2.5000	–	**425.450** 16.7500	**32870** 7390000	**1930.4** 76.00	–	–	**352** 777	Spec.
B-8867-G	TTHDFLSX-1	**555.625** 21.8750	**553.263** 21.7820	**201.828** 7.9460	**38.100** 1.5000	–	**482.600** 19.0000	**37540** 8440000	**1930.4** 76.00	–	–	**373** 867	24, 25
S-4674-G	TTHDDV	**577.850** 22.7500	**581.025** 22.8750	**228.600** 9.0000	**50.800** 2.0000	–	–	**43500** 9780000	–	–	–	**434** 957	Spec.
228TTSF950BA1668	TTHDDV	**581.025** 22.8750	**578.663** 22.7820	**167.894** 6.6100	**38.100** 1.5000	–	–	**43500** 9780000	–	**3.0** 0.12	–	**297** 655	24, 25
228TTSX950	TTHDFLSX-1	**581.025** 22.8750	**578.663** 22.7820	**193.777** 7.6290	**38.100** 1.5000	–	**508.000** 20.0000	**43500** 9780000	**1422.4** 56.00	**3.0** 0.12	–	**318** 701	24, 25
228TTSX950AO2017	TTHDFLSX-1	**581.025** 22.8750	**578.663** 22.7820	**193.777** 7.6290	**38.100** 1.5000	–	**508.000** 20.0000	**43500** 9780000	**1422.4** 56.00	**3.0** 0.12	–	**431** 950	24, 25
S-3632-C	TTHDFLSV-2[2]	**581.025** 22.8750	**581.025** 22.8750	**240.005** 9.4490	**107.950** 4.2500	–	–	**39140** 8800000	**1270.0** 50.00	**1.5** 0.06	–	(1)	Spec.
R-3355-A	TTHDFLSX-1	**603.250** 23.7500	**601.675** 23.6880	**207.620** 8.1740	**44.450** 1.7500	–	**495.300** 19.5000	**43500** 9780000	**1308.1** 51.50	**4.8** 0.19	–	**431** 950	Spec.
T1120FS-T1120S	TTHDSX-2[2]	**603.250** 23.7500	**603.250** 23.7500	**161.925** 6.3750	–	**279.400** 11.0000	**482.600** 19.0000	**33410** 7510000	**1308.1** 51.50	**11.2** 0.44	–	**306** 676	23, 24, 25
240TTSF954	TTHDDV	**609.600** 24.0000	**607.238** 23.9070	**177.038** 6.9700	**38.100** 1.5000	–	–	**48930** 11000000	–	**3.0** 0.12	–	(1)	Spec.
240TTSX954	TTHDFLSX-1	**609.600** 24.0000	**607.238** 23.9070	**204.013** 8.0320	**38.100** 1.5000	–	**533.400** 21.0000	**48930** 11000000	**1524.0** 60.00	**3.0** 0.12	–	**370** 817	24, 25
S-21292-C	TTHDFLSX-3[2]	**609.600** 24.0000	**710.006** 27.9530	**253.660** 9.9866	**38.037** 1.4975	–	**585.000** 23.0315	**48930** 11000000	**1524.0** 60.00	**3.3** 0.13	–	**494** 1088	Spec.

[1]Contact your Timken engineer.
[2]See pages 196–198 for Design Type.
NOTE: Bearing part numbers arranged by outer diameter.

Continued on next page.

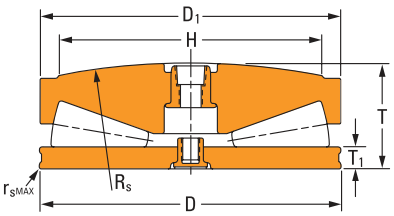

TTHDFLSX-1

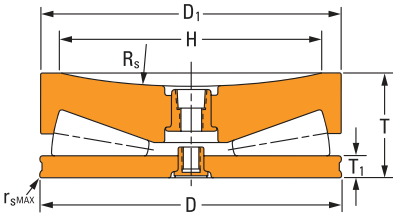

TTHDFLSV-1

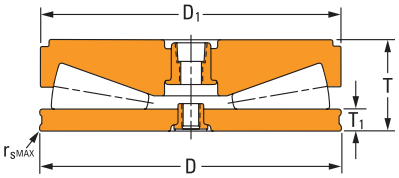

TTHDDV

Continued from previous page.

Bearing Part No.	Design Type	Bearing Dimensions						Static Axial Rating	Mounting Dimensions			Bearing Weight	Tolerance Table
		Large O.D. D	Small O.D. D_1	Bearing Width T	Flat Race Width T_1	Bore d	Screw Extension Diameter H	C_{a0}	Spherical Radius R_s	$r_{s\,max}$	R		
		mm in.	**mm** in.	**mm** in.	**mm** in.	**mm** in.	**mm** in.	**kN** lbf	**mm** in.	**mm** in.	**mm** in.	**kg** lbs.	
T-5263-C	TTHDDV	**638.226** 25.1270	–	**184.150** 7.2500	**38.100** 1.5000	–	–	**53380** 12000000	–	**3.0** 0.12	–	(1)	Spec.
252TTSF958	TTHDDV	**641.350** 25.2500	**638.988** 25.1570	**205.740** 8.1000	**38.100** 1.5000	–	–	**52930** 11900000	–	**3.0** 0.12	–	**432** 952	24, 25
252TTSV958	TTHDFLSV-1	**641.350** 25.2500	**638.988** 25.1570	**184.150** 7.2500	**38.100** 1.5000	–	**558.800** 22.0000	**52930** 11900000	**762.0** 30.00	**3.2** 0.13	–	**580** 858	24, 25
252TTSX958	TTHDFLSX-1	**641.350** 25.2500	**638.988** 25.1570	**212.674** 8.3730	**38.100** 1.5000	–	**558.800** 22.0000	**52930** 11900000	**1524.0** 60.00	**3.0** 0.12	–	**424** 933	24, 25
N-21041-B	TTHDFLSX-1	**641.350** 25.2500	**638.988** 25.1570	**212.674** 8.3730	**38.100** 1.5000	–	**558.800** 22.0000	**52930** 11900000	**1524.0** 60.00	**3.0** 0.12	–	**424** 934	24, 25
B-9122-A	TTHDFLSX-2[2]	**692.150** 27.2500	**689.762** 27.1560	**233.629** 9.1980	**38.100** 1.5000	–	**590.550** 23.2500	**52490** 11800000	**1524.0** 60.00	**3.0** 0.12	–	**603** 1329	Spec.
S-4718-A	TTHDFLSX-1	**840.000** 33.0709	**838.000** 32.9920	**281.610** 11.0870	**44.450** 1.7500	–	**725.000** 28.5430	**91190** 20500000	**1524.0** 60.00		–	**986** 2174	Spec.
V-505-A	TTHDDV	**840.000** 33.0709	**838.000** 32.9920	**249.619** 9.8275	**44.450** 1.7500	–	–	**91190** 20500000	–	**3.2** 0.13	–	**916** 2019	24, 25
N-21100-C	TTHDFLSV-2[2]	**850.000** 33.4646	**850.000** 33.4646	**360.000** 14.1732	**194.350** 7.6515	–	–	**78290** 17600000	**1500.0** 59.06		–	**1350** 2955	Spec.
T17020FS-T17020S	TTHDSX-2[2]	**942.975** 37.1250	**939.800** 37.0000	**260.350** 10.2500	–	**431.800** 17.0000	**762.000** 30.0000	**82290** 18500000	**2000.3** 78.75	**12.7** 0.50	–	**1260** 2776	23, 24, 25
T12040FS-T12040S	TTHDSX-2[2]	**1146.175** 45.1250	**1143.000** 45.0000	**317.500** 12.5000	–	**304.800** 12.0000	**990.600** 39.0000	**136560** 30700000	**2000.3** 78.75	**19.1** 0.75	–	**2530** 5577	23, 24, 25

[1]Contact your Timken engineer.
[2]See pages 196–198 for Design Type.
NOTE: Bearing part numbers arranged by outer diameter.

THRUST SPHERICAL ROLLER BEARINGS

Timken thrust spherical roller (TSR) bearings are used as axial positions for work rolls on long product mills and flat product cold tandem mills when the axial loads are high, and in auxiliary equipment applications.

Please refer to Timken® Thrust Bearing Catalog (order no. 10676) for more information on our complete range.

Fig. 59. Thrust spherical roller bearing.

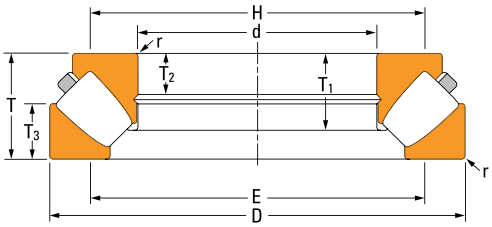

Fig. 60. TSR-EM bearing.

OVERALL DIMENSIONS:

d – Bore

D – Outer diameter

T – Width

E – Housing shoulder diameter

H – Shaft shoulder diameter

r – Fillet radius (max.)

NOMENCLATURE

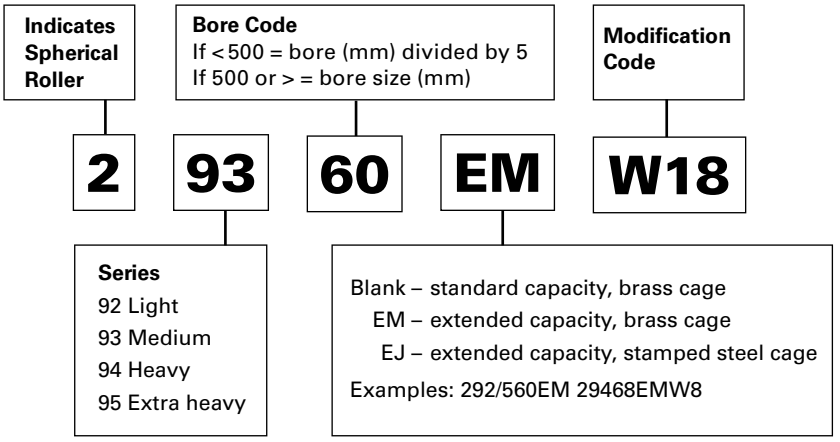

Fig. 61. Thrust spherical roller bearing nomenclature.

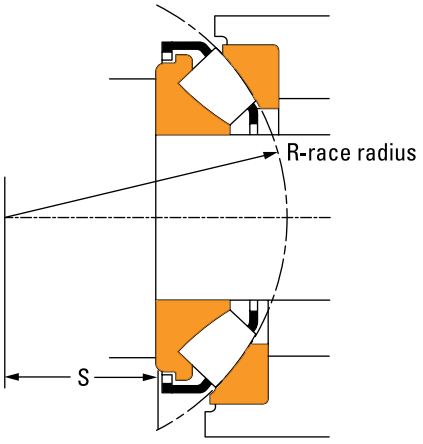

Fig. 62. TSR misalignment handling.

Timken TSR bearings are capable of handling the high degrees of misalignment seen in most applications.

THRUST SPHERICAL ROLLER BEARING DESIGN TYPES

EJ CAGE TYPE

- One spherical inner ring.[1]
- One spherical outer ring.
- EJ steel cage.

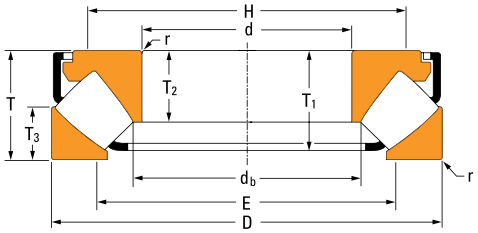

Fig. 63. EJ cage type.

EM CAGE TYPE

- One spherical inner ring.[2]
- One spherical outer ring.
- EM machined brass cage.

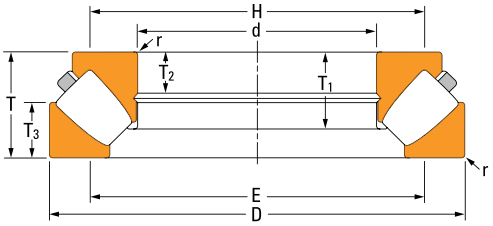

Fig. 64. EM cage type.

[1] For applications where the inner ring is axially located an EJ cage type is suggested. The maximum diameter of the spacer clamping the inner ring of the EJ cage type is indicated by dimension d_b.
[2] The EM cage type is not preferred for applications where the inner ring is axially located. Contact your Timken engineer for additional information on clamping loads and dimensions of the inner ring spacer when using EM cage types.

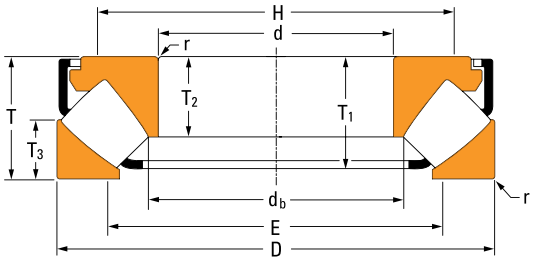

EJ CAGE TYPE

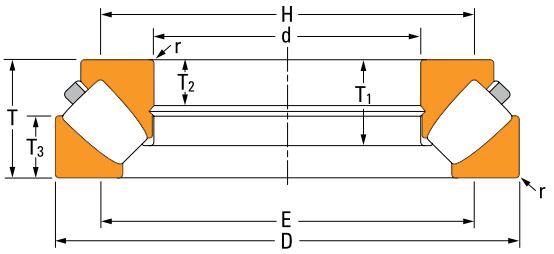

EM CAGE TYPE

TABLE 61. TSR PRODUCT DATA

Bearing No.	Bore d	O.D. D	Width T	Shoulder Diameter: Housing (Max.) E	Shoulder Diameter: Shaft (Min.) H	Spacer Outer Diameter (Max.) d_b	Inner Ring Assembly Width T_1	Inner Ring Contact Width T_2	Outer Ring Width T_3	S	Fillet Radius (Max.)[1] r	Load Rating: Static Load Rating C_{a0}	Load Rating: Dynamic Load Rating C_{a1}	Weight
	mm in.	**mm** in.	**mm** in.	**mm** in.	**mm** in.	**mm** in.	**mm** in.	**mm** in.	**mm** in.	**mm** in.	**mm** in.	**kN** lbs.	**kN** lbs.	**kg** lbs.
29418EJ	**90** 3.5433	**190** 7.4803	**60** 2.3622	**137.0** 5.39	**148.0** 5.83	**98.9** 3.89	**51.9** 2.04	**39.0** 1.54	**28.5** 1.12	**56.0** 2.20	**2.0** 0.08	**1890** 426000	**820** 184000	**7.39** 16.3
29320EJ	**100** 3.9370	**170** 6.6929	**42** 1.6535	**134.0** 5.28	**141.0** 5.55	**108.1** 4.26	**35.4** 1.39	**26.2** 1.03	**20.5** 0.81	**58.0** 2.28	**1.5** 0.06	**1240** 278000	**462** 104000	**3.50** 7.70
29420EJ	**100** 3.9370	**210** 8.2677	**67** 2.6378	**151.0** 5.94	**164.0** 6.46	**108.8** 4.28	**58.0** 2.28	**43.0** 1.69	**32.0** 1.26	**62.0** 2.44	**2.5** 0.10	**2390** 536000	**1020** 230000	**10.1** 22.4
29322EJ	**110** 4.3307	**190** 7.4803	**48** 1.8908	**149.0** 5.87	**157.0** 6.18	**118.6** 4.67	**40.3** 1.59	**30.3** 1.19	**24.8** 0.98	**63.8** 2.51	**2.0** 0.08	**1660** 372000	**604** 136000	**4.74** 10.5
29422EJ	**110** 4.3307	**230** 9.0551	**73** 2.8740	**167.0** 6.57	**180.0** 7.09	**120.3** 4.74	**63.2** 2.49	**47.0** 1.85	**34.7** 1.37	**69.0** 2.72	**2.5** 0.10	**2840** 638000	**1200** 269000	**13.2** 29.1
29324EJ	**120** 4.7244	**210** 8.2677	**54** 2.1260	**163.0** 6.42	**172.0** 6.77	**128.5** 5.06	**46.0** 1.81	**34.0** 1.34	**27.0** 1.06	**70.0** 2.76	**2.0** 0.08	**2070** 466000	**768** 173000	**7.16** 15.8
29424EJ	**120** 4.7244	**250** 9.8425	**78** 3.0709	**182.0** 7.17	**197.0** 7.76	**131.6** 5.18	**68.5** 2.70	**50.5** 1.99	**36.5** 1.44	**74.0** 2.92	**3.0** 0.12	**3320** 746000	**1390** 312000	**16.6** 36.7
29326EJ	**130** 5.1181	**225** 8.8583	**58** 2.2835	**177.0** 6.97	**186.0** 7.32	**140.3** 5.52	**48.6** 1.91	**36.7** 1.44	**30.1** 1.19	**75.6** 2.98	**2.0** 0.08	**2410** 543000	**852** 192000	**8.81** 19.4
29426EJ	**130** 5.1181	**270** 10.6299	**85** 3.3464	**197.0** 7.76	**213.0** 8.39	**142.4** 5.61	**72.7** 2.86	**54.0** 2.13	**40.9** 1.61	**81.0** 3.19	**3.0** 0.12	**3870** 871000	**1600** 359000	**20.9** 46.0
29328EJ	**140** 5.5118	**240** 9.4488	**60** 2.3622	**188.0** 7.40	**199.0** 7.83	**148.9** 5.86	**51.7** 2.04	**38.5** 1.52	**30.0** 1.18	**82.0** 3.23	**2.0** 0.08	**2710** 609000	**970** 218000	**10.2** 22.5
29428EJ	**140** 5.5118	**280** 11.0236	**85** 3.3464	**207.0** 8.15	**223.0** 8.78	**152.8** 6.02	**72.9** 2.87	**54.0** 2.13	**41.0** 1.61	**86.0** 3.39	**3.0** 0.12	**4110** 924000	**1640** 369000	**22.1** 48.6
29330EJ	**150** 5.9055	**250** 9.8425	**60** 2.3622	**198.0** 7.80	**209.0** 8.23	**159.5** 6.28	**52.2** 2.06	**38.0** 1.50	**28.0** 1.10	**87.0** 3.43	**2.0** 0.08	**2760** 620000	**993** 223000	**10.6** 23.3
29430EJ	**150** 5.9055	**300** 11.8110	**90** 3.5433	**222.0** 8.74	**238.0** 9.37	**163.5** 6.44	**78.3** 3.08	**58.0** 2.28	**43.4** 1.71	**92.0** 3.62	**3.0** 0.12	**4730** 1060000	**1860** 418000	**27.0** 59.5
29332EJ	**160** 6.2992	**270** 10.6299	**67** 2.6378	**213.0** 8.39	**225.0** 8.86	**170.5** 6.71	**57.4** 2.26	**42.0** 1.65	**33.0** 1.30	**92.0** 3.62	**2.5** 0.10	**3370** 758000	**1190** 267000	**14.2** 31.2
29432EJ	**160** 6.2992	**320** 12.5984	**95** 3.7402	**237.0** 9.33	**255.0** 10.04	**175.0** 6.89	**82.2** 3.24	**60.5** 2.38	**45.5** 1.79	**99.0** 3.90	**4.0** 0.16	**5340** 1200000	**2100** 472000	**32.0** 70.6
29334EJ	**170** 6.6929	**280** 11.0236	**67** 2.6378	**223.0** 8.78	**235.0** 9.25	**179.2** 7.06	**58.6** 2.31	**42.2** 1.66	**30.5** 1.20	**96.0** 3.78	**2.5** 0.10	**3430** 770000	**1230** 277000	**14.5** 32.1

[1]Maximum shaft or housing fillet radius that bearing corners will clear.

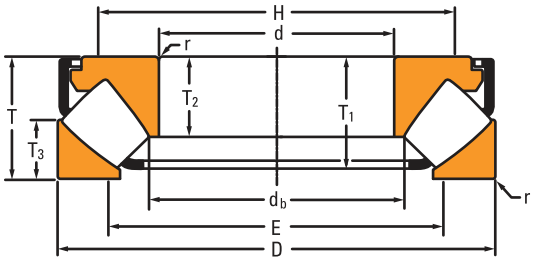

EJ CAGE TYPE

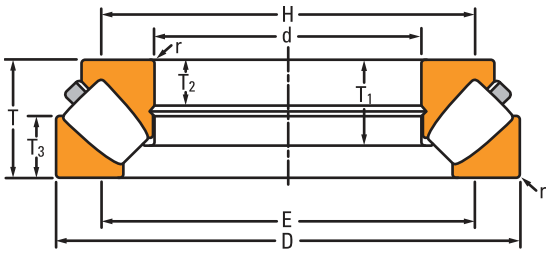

EM CAGE TYPE

Continued from previous page.

Bearing No.	Bore d	O.D. D	Width T	Shoulder Diameter: Housing (Max.) E	Shoulder Diameter: Shaft (Min.) H	Spacer Outer Diameter (Max.) d_b	Inner Ring Assembly Width T_1	Inner Ring Contact Width T_2	Outer Ring Width T_3	S	Fillet Radius (Max.)[1] r	Load Rating: Static Load Rating C_{a0}	Load Rating: Dynamic Load Rating C_{a1}	Weight
	mm in.	**mm** in.	**mm** in.	**mm** in.	**mm** in.	**mm** in.	**mm** in.	**mm** in.	**mm** in.	**mm** in.	**mm** in.	**kN** lbs.	**kN** lbs.	**kg** lbs.
29434EJ	**170** 6.6929	**340** 13.3858	**103** 4.0551	**251.0** 9.88	**270.0** 10.63	**184.8** 7.28	**89.0** 3.50	**65.5** 2.58	**50.0** 1.97	**104.0** 4.09	**4.0** 0.16	**6140** 1380000	**2380** 536000	**39.7** 87.4
29336EJ	**180** 7.0866	**300** 11.8110	**73** 2.8750	**238.0** 9.37	**251.0** 9.88	**190.7** 7.51	**62.7** 2.47	**46.0** 1.81	**35.5** 1.40	**103.0** 4.06	**2.5** 0.10	**4130** 927000	**1430** 322000	**18.6** 41.1
29436EJ	**180** 7.0866	**360** 14.1732	**109** 4.2913	**267.0** 10.51	**286.0** 11.26	**197.6** 7.78	**94.1** 3.70	**69.5** 2.74	**53.0** 2.09	**110.0** 4.33	**4.0** 0.16	**7090** 1590000	**2660** 598000	**47.5** 105
29338EJ	**190** 7.4803	**320** 12.5984	**78** 3.0760	**253.0** 9.96	**268.0** 10.55	**202.2** 7.96	**67.7** 2.66	**49.0** 1.93	**36.0** 1.42	**110.0** 4.33	**3.0** 0.12	**4550** 1020000	**1620** 364000	**22.5** 49.6
29438EJ	**190** 7.4803	**380** 14.9606	**115** 4.5276	**281.0** 11.06	**303.0** 11.93	**205.5** 8.09	**100.3** 3.95	**73.0** 2.87	**55.5** 2.19	**117.0** 4.61	**4.0** 0.16	**7910** 1780000	**3040** 683000	**55.7** 123
29340EJ	**200** 7.8740	**340** 13.3858	**85** 3.3480	**269.0** 10.59	**284.0** 11.18	**213.3** 8.40	**73.9** 2.91	**53.5** 2.11	**40.0** 1.57	**116.0** 4.57	**3.0** 0.12	**5370** 1210000	**1880** 423000	**28.4** 62.7
29440EJ	**200** 7.8740	**400** 15.7480	**122** 4.8031	**295.0** 11.61	**317.0** 12.48	**217.0** 8.54	**104.2** 4.10	**77.0** 3.03	**59.4** 2.34	**122.0** 4.80	**4.0** 0.16	**8470** 1900000	**3210** 723000	**64.8** 143
29344EJ	**220** 8.6614	**360** 14.1716	**85** 3.3477	**288.0** 11.34	**303.0** 11.93	**231.6** 9.12	**74.1** 2.92	**55.0** 2.17	**41.0** 1.61	**125.0** 4.92	**3.0** 0.12	**5840** 1310000	**1950** 437000	**30.7** 67.6
29444EJ	**220** 8.6614	**420** 16.5354	**122** 4.8031	**317.0** 12.48	**339.0** 13.35	**237.8** 9.36	**105.7** 4.16	**77.0** 3.03	**58.5** 2.30	**132.0** 5.20	**5.0** 0.20	**9090** 2040000	**3350** 754000	**69.4** 153
29348EJ	**240** 9.4488	**380** 14.9606	**85** 3.3477	**308.0** 12.13	**323.0** 12.72	**251.9** 9.92	**74.4** 2.93	**54.0** 2.13	**40.5** 1.59	**135.0** 5.32	**3.0** 0.12	**6280** 1410000	**2040** 458000	**32.8** 72.4
29448EJ	**240** 9.4488	**440** 17.3228	**122** 4.8031	**338.0** 13.31	**360.0** 14.17	**259.0** 10.20	**104.7** 4.12	**76.0** 2.99	**59.0** 2.32	**142.0** 5.59	**5.0** 0.20	**9520** 2140000	**3410** 767000	**73.3** 162
29352EJ	**260** 10.2362	**420** 16.5354	**95** 3.7402	**340.0** 13.39	**356.0** 14.02	**275.7** 10.85	**84.7** 3.33	**61.0** 2.40	**46.0** 1.81	**148.0** 5.83	**4.0** 0.16	**8100** 1820000	**2580** 579000	**46.9** 103
29452EJ	**260** 10.2362	**480** 18.8976	**132** 5.1969	**367.0** 14.45	**391.0** 15.39	**279.2** 10.99	**116.9** 4.60	**86.0** 3.39	**63.0** 2.48	**154.0** 6.06	**5.0** 0.20	**11900** 2680000	**4160** 935000	**96.4** 212
29356EJ	**280** 11.0236	**440** 17.3228	**95** 3.7418	**360.0** 14.17	**376.0** 14.80	**296.8** 11.69	**84.7** 3.33	**62.0** 2.44	**45.5** 1.79	**158.0** 6.22	**4.0** 0.16	**8500** 1910000	**2580** 580000	**49.5** 109
29456EJ	**280** 11.0236	**520** 20.4724	**145** 5.7148	**397.0** 15.63	**423.0** 16.65	**300.6** 11.83	**128.9** 5.07	**95.0** 3.74	**70.0** 2.76	**166.0** 6.54	**5.0** 0.20	**14300** 3220000	**4920** 1110000	**126** 278
29360EJ	**300** 11.8110	**480** 18.8978	**109** 4.2929	**388.0** 15.28	**407.0** 16.02	**315.6** 12.43	**95.5** 3.76	**70.0** 2.76	**51.0** 2.01	**168.0** 6.61	**4.0** 0.16	**9900** 2230000	**3150** 709000	**67.3** 148

[1]Maximum shaft or housing fillet radius that bearing corners will clear.

Continued on next page.

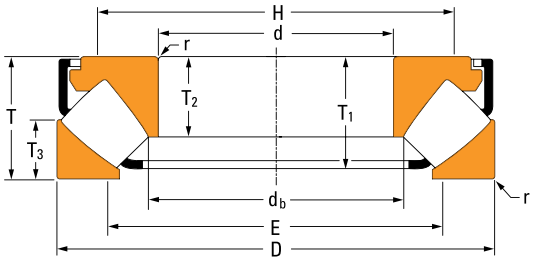

EJ CAGE TYPE

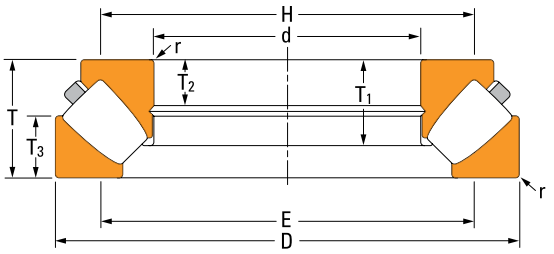

EM CAGE TYPE

TABLE 61. TSR PRODUCT DATA *– continued*

Bearing No.	Bore d	O.D. D	Width T	Shoulder Diameter: Housing (Max.) E	Shoulder Diameter: Shaft (Min.) H	Spacer Outer Diameter (Max.) d_b	Inner Ring Assembly Width T_1	Inner Ring Contact Width T_2	Outer Ring Width T_3	S	Fillet Radius (Max.)[1] r	Load Rating: Static Load Rating C_{a0}	Load Rating: Dynamic Load Rating C_{a1}	Weight
	mm in.	mm in.	mm in.	mm in.	mm in.	mm in.	mm in.	mm in.	mm in.	mm in.	mm in.	kN lbs.	kN lbs.	kg lbs.
29460EJ	**300** 11.8110	**540** 21.2598	**145** 5.7087	**418.0** 16.46	**443.0** 17.44	**321.1** 12.64	**128.6** 5.06	**95.0** 3.74	**70.5** 2.78	**175.0** 6.89	**5.0** 0.20	**15000** 3370000	**4990** 1120000	**133** 292
29364EJ	**320** 12.5984	**500** 19.6850	**109** 4.2913	**407.0** 16.02	**427.0** 16.81	**333.3** 13.12	**94.4** 3.72	**68.0** 2.68	**53.0** 2.09	**180.0** 7.09	**4.0** 0.16	**10700** 2400000	**2830** 636000	**71.6** 158
29464EM	**320** 12.5984	**580** 22.8346	**155** 6.1024	**444.0** 17.48	**469.0** 18.46	–	**112.2** 4.42	**56.3** 2.22	**80.5** 3.17	**191.0** 7.52	**6.0** 0.24	**18909** 4251000	**5155** 1159000	**164** 362
29368EJ	**340** 13.3858	**540** 21.2598	**122** 4.8031	**443.0** 17.44	**463.0** 18.23	**365.8** 14.40	**102.6** 4.04	**73.5** 2.89	**59.5** 2.34	**192.0** 7.56	**4.0** 0.16	**12000** 2690000	**3120** 702000	**94.8** 209
29468EM	**340** 13.3858	**620** 24.4094	**170** 6.6929	**473.0** 18.62	**500.0** 19.69	–	**123.7** 4.87	**72.0** 2.84	**88.0** 3.46	**202.0** 7.95	**6.0** 0.24	**22032** 4953000	**5922** 1331000	**207** 456
29372EM	**360** 14.1732	**560** 22.0472	**122** 4.8031	**457.0** 17.99	**476.0** 18.74	–	**86.9** 3.42	**50.0** 1.97	**65.0** 2.56	**202.0** 7.95	**4.0** 0.16	**15133** 3402000	**3632** 816400	**102** 225
29472EM	**360** 14.1732	**640** 25.1968	**170** 6.6929	**498.0** 19.61	**528.0** 20.79	–	**119.6** 4.71	**63.0** 2.48	**83.5** 3.29	**210.0** 8.27	**6.0** 0.24	**19500** 4380000	**5440** 1220000	**209** 461
29376EM	**380** 14.9606	**600** 23.6220	**132** 5.1969	**486.0** 19.13	**507.0** 19.96	–	**94.5** 3.72	**49.0** 1.93	**70.0** 2.76	**216.0** 8.50	**5.0** 0.20	**17775** 3996000	**4295** 965500	**130** 286
29476EM	**380** 14.9606	**670** 26.3780	**175** 6.8898	**518.0** 20.39	**546.1** 21.50	–	**126.5** 4.98	**73.1** 2.87	**91.0** 3.58	**224.0** 8.82	**6.0** 0.24	**24874** 5592000	**6493** 1460000	**242** 564
29380EM	**400** 15.7480	**620** 24.4094	**132** 5.1968	**510.0** 20.08	**534.0** 21.02	–	**90.5** 3.56	**48.0** 1.89	**64.0** 2.52	**225.0** 8.86	**5.0** 0.20	**15100** 3390000	**3850** 864000	**129** 284
29480EM	**400** 15.7480	**710** 27.9528	**185** 7.2835	**547.0** 21.54	**577.1** 22.72	–	**134.9** 5.31	**77.7** 3.06	**97.0** 3.82	**237.0** 9.33	**6.0** 0.24	**28469** 6400000	**7333** 1649000	**290** 640
29284EM	**420** 16.5354	**580** 22.8346	**95** 3.7402	**498.0** 19.61	**513.1** 20.20	–	**65.2** 2.57	**38.0** 1.42	**52.0** 2.05	**225.0** 8.86	**4.0** 0.16	**12464** 2802000	**2682** 602900	**68.2** 150
29384EM	**420** 16.5354	**650** 25.5906	**140** 5.5118	**537.0** 21.14	**561.0** 22.09	–	**95.8** 3.77	**53.0** 2.09	**67.5** 2.66	**235.0** 9.25	**5.0** 0.20	**16000** 3610000	**4040** 909000	**148** 327
29484EM	**420** 16.5354	**730** 28.7402	**185** 7.2835	**576.0** 22.68	**608.0** 23.94	–	**133.4** 5.25	**70.0** 2.76	**90.5** 3.56	**244.0** 9.61	**6.0** 0.24	**26000** 5860000	**6780** 1530000	**295** 651
29388EM	**440** 17.3228	**680** 26.7717	**145** 5.7087	**561.0** 22.09	**585.0** 23.03	–	**101.1** 3.98	**52.0** 2.05	**70.5** 2.78	**245.0** 9.65	**5.0** 0.20	**18500** 4160000	**4530** 1020000	**175** 377
29488EM	**440** 17.3228	**780** 30.7087	**206** 8.1102	**602.0** 23.70	**635.0** 25.00	–	**148.3** 5.84	**89.0** 3.50	**108.0** 4.25	**257.0** 10.12	**8.0** 0.31	**33713** 7579000	**8606** 1935000	**387** 854

[1]Maximum shaft or housing fillet radius that bearing corners will clear.

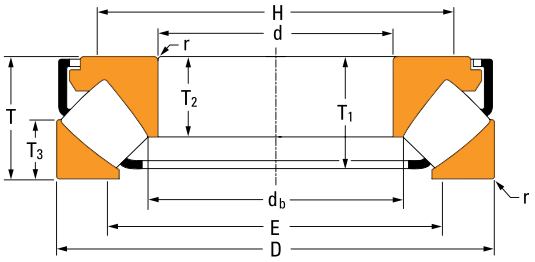

EJ CAGE TYPE

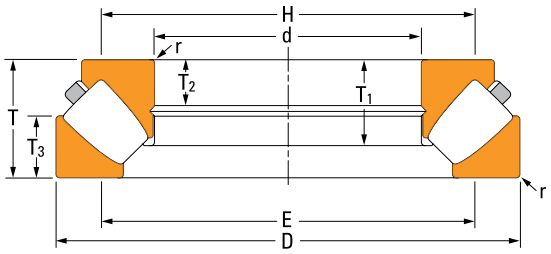

EM CAGE TYPE

Continued from previous page.

Bearing No.	Bore d	O.D. D	Width T	Shoulder Diameter: Housing (Max.) E	Shoulder Diameter: Shaft (Min.) H	Spacer Outer Diameter (Max.) d_b	Inner Ring Assembly Width T_1	Inner Ring Contact Width T_2	Outer Ring Width T_3	S	Fillet Radius (Max.)[1] r	Load Rating: Static Load Rating C_{a0}	Load Rating: Dynamic Load Rating C_{a1}	Weight
	mm in.	**mm** in.	**mm** in.	**mm** in.	**mm** in.	**mm** in.	**mm** in.	**mm** in.	**mm** in.	**mm** in.	**mm** in.	**kN** lbs.	**kN** lbs.	**kg** lbs.
29392EM	**460** 18.1102	**710** 27.9528	**150** 5.9055	**589.0** 23.19	**614.0** 24.17	–	**105.3** 4.15	**55.0** 2.17	**72.5** 2.85	**257.0** 10.12	**5.0** 0.20	**20200** 4540000	**4820** 1080000	**194** 427
29492EM	**460** 18.1102	**800** 31.4961	**206** 8.1102	**631.0** 24.84	**666.0** 26.22	–	**147.8** 5.82	**77.0** 3.03	**101.5** 4.00	**268.0** 10.55	**8.0** 0.31	**31700** 7120000	**8120** 1830000	**397** 874
29396EM	**480** 18.8976	**730** 28.7402	**150** 5.9055	**610.0** 24.02	**635.0** 25.00	–	**101.6** 4.00	**54.0** 2.13	**73.5** 2.89	**270.0** 10.63	**5.0** 0.20	**20000** 4500000	**4820** 1080000	**196** 433
29496EM	**480** 18.8976	**850** 33.4646	**224** 8.8189	**662.0** 26.06	**700.0** 27.56	–	**161.5** 6.36	**88.0** 3.46	**108.0** 4.25	**280.0** 11.02	**8.0** 0.31	**35800** 8040000	**9320** 2090000	**493** 1087
293/500EM	**500** 19.6850	**750** 29.5276	**150** 5.9055	**630.0** 24.80	**655.0** 25.79	–	**101.5** 4.00	**54.0** 2.13	**74.0** 2.91	**280.0** 11.02	**5.0** 0.20	**20500** 4620000	**4840** 1090000	**203** 447
294/500EM	**500** 19.6850	**870** 34.2520	**224** 8.8189	**677.0** 26.65	**712.0** 28.03	–	**163.0** 6.42	**95.5** 3.76	**118.0** 4.65	**293.0** 11.54	**8.0** 0.31	**42369** 9525000	**10355** 2328000	**544** 1200
293/530EM	**530** 20.8661	**800** 31.4961	**160** 6.2992	**670.0** 26.38	**697.0** 27.44	–	**112.3** 4.42	**58.0** 2.28	**76.0** 2.99	**295.0** 11.61	**6.0** 0.24	**24100** 5410000	**5600** 1260000	**251** 554
294/530EM	**530** 20.8661	**920** 36.2205	**236** 9.2913	**716.0** 28.19	**753.0** 29.65	–	**171.4** 6.75	**93.7** 3.69	**124.0** 4.88	**310.0** 12.21	**8.0** 0.31	**47120** 10593000	**11441** 2572000	**610** 1344
293/560EM	**560** 22.0472	**850** 33.4646	**175** 6.8898	**712.0** 28.03	**740.0** 29.13	–	**119.1** 4.69	**63.0** 2.48	**85.0** 3.35	**310.0** 12.21	**6.0** 0.24	**26600** 5990000	**6180** 1390000	**310** 683
294/560EM	**560** 22.0472	**980** 38.5827	**250** 9.8425	**759.0** 29.88	**798.1** 31.42	–	**183.2** 7.21	**106.5** 4.19	**134.0** 6.28	**328.0** 12.91	**10.0** 0.39	**54366** 12222000	**13014** 2926000	**744** 1640
292/600EM	**600** 23.6220	**800** 31.4961	**122** 4.8031	**699.0** 27.52	**718.0** 28.27	–	**82.9** 3.26	**40.6** 1.60	**64.0** 2.52	**322.0** 12.68	**4.0** 0.16	**21916** 4927000	**4366** 981600	**152** 335
293/600EM	**600** 23.6220	**900** 35.4331	**180** 7.0946	**751.0** 29.57	**780.0** 30.71	–	**127.3** 5.01	**65.0** 2.56	**89.0** 3.50	**335.0** 13.19	**6.0** 0.24	**32700** 7360000	**7380** 1660000	**361** 796
294/600EM	**600** 23.6220	**1030** 40.5512	**258** 10.1575	**805.0** 31.69	**847.1** 33.35	–	**186.0** 7.32	**107.0** 4.21	**134.0** 5.28	**351.0** 13.82	**10.0** 0.39	**57529** 12933000	**13842** 3112000	**822** 1814
292/630EM	**630** 24.8030	**850** 33.4646	**132** 5.1968	**759.0** 29.88	**738.0** 29.06	–	**90.3** 3.56	**43.9** 1.73	**71.5** 2.82	**338.0** 13.31	**5.0** 0.20	**25800** 5800000	**5040** 1133000	**195** 430
294/630EM	**630** 24.8030	**1090** 42.9134	**280** 11.0236	**849.0** 33.43	**893.1** 35.16	–	**203.1** 8.00	**114.2** 4.50	**146.0** 5.75	**367.0** 14.45	**10.0** 0.39	**65905** 14816000	**15636** 3515000	**1012** 2230
292/670EM	**670** 26.3780	**900** 35.4331	**140** 5.5118	**792.0** 31.18	**813.0** 32.01	–	**89.5** 3.52	**44.0** 1.73	**73.0** 2.87	**363.0** 14.29	**5.0** 0.20	**22000** 4940000	**4290** 965000	**219** 482

[1]Maximum shaft or housing fillet radius that bearing corners will clear.

Continued on next page.

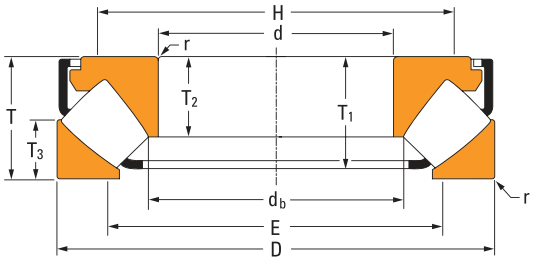

EJ CAGE TYPE

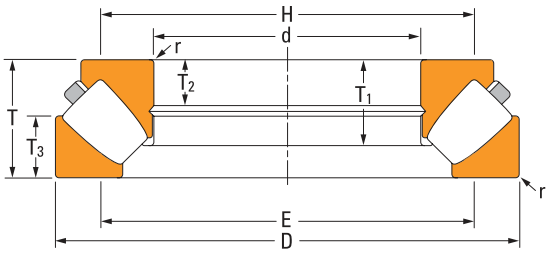

EM CAGE TYPE

TABLE 61. TSR PRODUCT DATA *– continued*

Bearing No.	Bore d	O.D. D	Width T	Shoulder Diameter: Housing (Max.) E	Shoulder Diameter: Shaft (Min.) H	Spacer Outer Diameter (Max.) d_b	Inner Ring Assembly Width T_1	Inner Ring Contact Width T_2	Outer Ring Width T_3	S	Fillet Radius (Max.)[1] r	Load Rating: Static Load Rating C_{a0}	Load Rating: Dynamic Load Rating C_{a1}	Weight
	mm in.	**mm** in.	**mm** in.	**mm** in.	**mm** in.	**mm** in.	**mm** in.	**mm** in.	**mm** in.	**mm** in.	**mm** in.	**kN** lbs.	**kN** lbs.	**kg** lbs.
292/670EJ	**670** 26.3780	**900** 35.4331	**140** 5.5118	**792.0** 31.18	**813.0** 32.01	–	**111.1** 4.37	**94.0** 3.70	**73.0** 2.87	**363.0** 14.29	**5.0** 0.20	**23100** 5190000	**4450** 1000000	**224** 494
294/670EM	**670** 26.3780	**1150** 45.2756	**290** 11.4173	**899.0** 35.39	**946.0** 37.24	–	**209.3** 8.24	**118.0** 4.65	**150.0** 5.91	**391.0** 15.39	**12.0** 0.47	**71968** 16179000	**17031** 3829000	**1159** 2538
294/710EM	**710** 27.9528	**1220** 48.0315	**308** 12.1260	**953.0** 37.52	**1003.0** 39.49	–	**222.6** 8.76	**122.7** 4.83	**160.0** 6.30	**414.0** 16.30	**12.0** 0.47	**81296** 18276000	**19056** 4284000	**1379** 3041
293/750EM	**750** 29.5276	**1120** 44.0945	**224** 8.8189	**930.0** 36.61	**966.0** 38.03	–	**156.4** 6.16	**83.3** 3.28	**117.0** 4.61	**418.0** 16.46	**8.0** 0.32	**55856** 12557000	**11774** 2647000	**700** 1542
294/750EM	**750** 29.5276	**1280** 50.3937	**315** 12.4016	**1002.0** 39.45	**1054.0** 41.50	–	**226.8** 8.93	**130.2** 5.13	**163.0** 6.42	**439.0** 17.28	**12.0** 0.47	**87901** 19761000	**20556** 4621000	**1537** 3388
294/800EM	**800** 31.4961	**1360** 53.5433	**335** 13.1890	**1067.0** 42.01	**1122.0** 44.17	–	**241.6** 9.51	**131.5** 5.18	**173.5** 6.83	**467.0** 18.39	**12.0** 0.47	**98279** 22094000	**22702** 5104000	**1836** 4048
294/850EM	**850** 33.4646	**1440** 56.6929	**354** 13.9402	**1131.0** 44.53	**1190.0** 46.85	–	**253.1** 9.96	**139.8** 5.51	**181.0** 7.13	**495.0** 19.49	**12.0** 0.47	**109311** 24574000	**25252** 5677000	**2156** 4753
294/850EJ	**850** 33.4646	**1440** 56.6929	**354** 13.9402	**1129.0** 44.50	**1171.1** 46.11	–	**309.5** 12.18	**224.7** 8.85	**185.5** 7.30	**495.0** 19.49	**12.0** 0.47	**112882** 25377000	**24652** 5542000	**2253** 4969
294/900EM	**900** 35.4331	**1520** 59.8425	**372** 14.6457	**1194.0** 47.01	**1253.0** 49.33	–	**272.1** 10.71	**148.8** 5.86	**195.5** 7.70	**523.0** 20.59	**12.0** 0.47	**126952** 28540000	**27437** 6168000	**2561** 5646
294/950EM	**950** 37.4016	**1600** 62.9921	**390** 15.3543	**1259.0** 49.57	**1321.0** 52.01	–	**284.6** 11.21	**155.4** 6.12	**204.0** 8.03	**552.0** 21.73	**12.0** 0.47	**139020** 31253000	**30603** 6880000	**2962** 6531
292/1000EM	**1000** 39.3701	**1320** 51.9685	**190** 7.4803	**1157.0** 45.55	**1187.0** 46.73	–	**131.1** 5.16	**68.1** 2.68	**102.0** 4.02	**539.0** 21.22	**8.0** 0.31	**59108** 13288000	**10582** 2379000	**633** 1396
293/1000EM	**1000** 39.3701	**1460** 57.4803	**276** 10.8661	**1268.0** 49.92	**1224.0** 48.19	–	**275.8** 10.86	**104.3** 4.11	**144.5** 5.69	**561.0** 22.09	**10.0** 0.39	**94276** 21194000	**18518** 4163000	**1426** 3144
294/1000EM	**1000** 39.3701	**1670** 65.7480	**402** 15.8268	**1319.0** 51.93	**1385.1** 54.53	–	**289.9** 11.41	**162.0** 6.38	**208.5** 8.21	**580.0** 22.84	**12.0** 0.47	**148037** 33280000	**32589** 7326000	**3263** 7195

[1]Maximum shaft or housing fillet radius that bearing corners will clear.

02-18 Order No. 10675 | Timken® is a registered trademark of The Timken Company. | © 2018 The Timken Company | Printed in U.S.A.

TIMKEN

The Timken team applies their know-how to improve the reliability and performance of machinery in diverse markets worldwide. The company designs, makes and markets high-performance mechanical components, including bearings, belts, brakes, clutches, chain, couplings, gears and related mechanical power transmission products and services.

Price: USD $75

Stronger. By Design.

www.timken.com